BTS.III.11.14.0944 Reg. No. | | | | | | | | |

B

B.Tech. Degree III Semester Examination November 2014

IT/ME 1302 ELECTRICAL TECHNOLOGY

(2012 Scheme)

Time : 3 Hours Maximum Marks : 100

PART A

(Answer *ALL* questions)

$(8 \times 5 = 40)$

I. (a) Distinguish between power transformer and a distribution transformer.

(b) Obtain the relationship for amount of copper saved in an autotransformer.

(c) Obtain the emf equation for a DC generator.

(d) Explain the principle of operation of a DC motor.

(e) Obtain the relationship between the speed and frequency of an alternator.

(f) How is speed control achieved in an induction motor? Explain.

(g) What is meant by load dispatching?

(h) Explain the terms (i) corona (ii) skim effect.

PART B

$(4 \times 15 = 60)$

II. (a) Draw and explain the vector diagram of a single phase transformer for a leading power factor load. (8)

(b) A 2,200/200v transformer draws a no-load primary current 0.6A and absorbs 400watts. Find the magntising and iron loss currents. (7)

OR

III. (a) Distinguish between current transformer and potential transformer. (5)

(b) Obtain the equivalent circuit of a 200/400v 50HZ 1ϕ transformer from the following test data. (10)

Oc test – 200v, 0.7A, 70W on lv side SC lest. 15v, 10A, 85W – on av side. Calculate the secondary voltage when delivering 5KN at 0.8 pf lagging, the primary voltage being 200v.

IV. (a) Explain the condition for maximum efficiency for a DC generator. (5)

(b) A long shunt DC generator running at 1000 rpm supplies 22KW at a terminal voltage of 220v. The resistance of armature, shunt field and the series field are 0.05, 110 and 0.06 Ω respectively. The overall efficiency at the above load is 88%. Find (i) Cu losses. (ii) iron and friction loss (iii) the torque exerted by the primover. (10)

OR

V. (a) What are the different methods of improving commutation? (7)

(b) A 460v series motor runs at 500rpm taking a current of 40A. Calculate the speed and percentage change in torque if the load is reduced so that the motor is taking 30A. Total resistance of the armature and field circuit is 0.8 Ω. Assume flux is proportional to the field current. (8)

(P.T.O.)

VI. (a) Obtain the equation of induced emf in an alternator considering distribution as well as short chording. (10)

(b) From the following test results, determine the voltage regulation of a 2000v, 1ϕ alternator delivering a current of 100A at 0.8 pf leading. Full load current of 100A is produced on short circuit by a field excitation 2.5A. An emf of 500v is produced on open circuit by the same excitation. (5)

OR

VII. (a) What is meant by synchronous condenser? Explain. (5)

(b) An 18.65KW, 4 pole, 50Hz, 3phase induction motor has friction and windage losses of 2.5% of the output. The full load slip is 4%. Compute for the full load (i) The rotor copper loss (ii) the rotor input (iii) Shaft torque (iv) the gross electromagnetic torque. (10)

VIII. With a neat schematic, explain the working of a nuclear power plant. (15)

OR

IX. What are the different electrical equipments in power stations? Explain. (15)

***

BTS.III.11.14. 0966 Reg. No. | | | | | | | | |

D

B.Tech. Degree III Semester Examination November 2014

ME 1303 MECHANICS OF SOLIDS

(2012 Scheme)

Time : 3 Hours Maximum Marks : 100

PART A

(Answer *ALL* questions)

(8 × 5 = 40)

I. (a) Draw the stress strain diagram of a typical ductile material and mark the salient points.

(b) Differentiate between plane stress and plane strain.

(c) List the assumptions in torsion equation.

(d) What is point of contra flexure? Illustrate with a simple example.

(e) State and explain any one theory of failure applicable for cast iron.

(f) Find the ratio of width to depth (b/d) of the strongest beam obtainable from a cylinder of dia 'D'.

(g) What is meant by equivalent length of a column? What are its values under the typical loading conditions?

(h) A beam of rectangular section 100 mm wide and 240 mm deep is simply supported over a span of 4 m. What uniformily distributed load will make a central deflection of 6 mm? Take E = 0.11 x 10^5 N/mm^2

PART B

(4 × 15 = 60)

II. A steel cylinder is inserted in a copper tube as shown. The cylinder and tube are compressed between rigid parallel plates. Find the stresses in the steel and copper and also the compressive strain. Take P = 450 kN, d = 100 mm, D = 200 mm For steel E = 210 kN/mm^2. For copper, E = 110 kN mm^2.

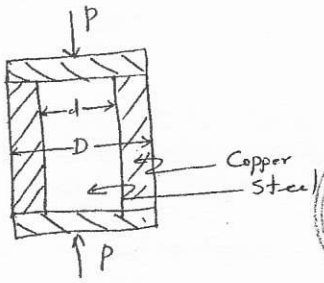

OR

III. Calculate the thickness of metal required for a C.I pipe of 800 mm diameter, to transport water under a static head of 100 m, if the permissible tensile stress is 20 MPa.

IV. Find the speed at which 200 kW should be transmitted through a shaft of 60 mm diameter, if the maximum permissible shear stress is 50 MPa. If the length of the shaft is 6m, find the angle of twist. Take G = 80 GPa.

OR

(P.T.O.)

V. Construct the shear force and bending moment diagram for the beam shown:

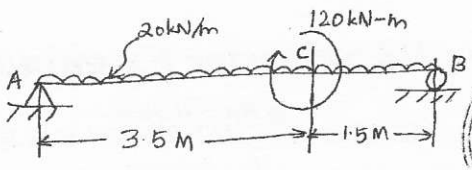

VI. A cast iron water pipe 450 mm inner diameter and 25 mm thickness is supported at two points 10 m apart. Find the maximum stress in the metal when it is running full. Unit weight of C.I. is 72 kN/m^3.

OR

VII. At a certain cross section of a shaft, 100 mm in diameter, there is a bending moment of 5 kN-m and a twisting moment of 7.5 kN-m. Calculate the maximum direct stress induced in the section and specify the position of the plane on which it acts.

VIII. A beam of size 300 x 150 mm^2 is freely supported over a span of 5m. If carries two point loads of 30 kN and 40 kN at 1m and 3.75 m from the left support. Find the position and location of maximum deflection.

OR

IX. A vertical steel strut of 40 mm diameter and 3 m long, has pinned ends. Taking E = 215 GPa, calculate the crippling axial load using Eulers formula. Also find the maximum central deflection on buckling if the yield stress is 310 N/mm^2 is reached. Neglect the effect of axial thrust.

***

BTS – III – 11.14 – 0981 Reg. No. | | | | | | | | |

D

B.Tech. Degree III Semester Examination November 2014

ME 1304 FLUID MECHANICS

(2012 Scheme)

Time : 3 Hours Maximum Marks : 100

PART A

(Answer *ALL* questions)

(8 x 5 = 40)

I. (a) Define and explain the Newton's law of viscosity.

(b) What are the conditions of equilibrium of a floating body and a submerged body?

(c) What is a pitot-tube? How will you determine the velocity at any point with the help of pitot tube?

(d) Explain minor losses in pipes.

(e) Define the terms: (i) velocity potential function (ii) stream function

(f) What is magnus effect? Explain.

(g) What do you understand by the terms boundary layer and boundary layer thickness?

(h) What do you mean by Karman vortex street? Explain with a neat diagram.

PART B

(4 x 15 = 60)

II. (a) The pressure intensity at a point in a fluid is given 4.9 N/cm^2. Find the corresponding height of fluid when it is (i) water (ii) an oil of specific gravity 0.8. (7)

(b) Calculate the capillary effect in millimeters in a glass tube of 4 mm diameter, when immersed in (i) water (ii) mercury. The values of the surface tension of water and mercury in contact with air are 0.075 N/m and 0.52 N/m respectively. The angle of contact for water is zero that for mercury 130°. Take density of water is 1000 kg/m^3. (8)

OR

III. (a) A circular plate 3 m diameter is immersed in water in such a way that its greatest and least depth below the free surface are 4 m and 1.5 m respectively. Determine the total pressure on one face of the plate and position of centre of pressure. (7)

(b) What is the difference between U tube differential manometers and inverted U tube differential manometers? Where are they used? (8)

IV. (a) What is Euler's equation of motion? How will you obtain Bernoulli's equation from it? (8)

(b) Derive Darcy-Weisbach equation. (7)

OR

V. (a) An oil of specific gravity 0.8 is flowing through a venturimeter having inlet diameter 20 cm and throat diameter 10 cm. The oil-mercury differential manometer shows a reading of 25 cm. Calculate the discharge of oil through the horizontal venturimeter. Take Cd = 0.98. (7)

(b) Write short notes on the following: (8)

(i) Laminar flow
(ii) Turbulent flow
(iii) Dimensions of flow

(P.T.O.)

VI. (a) The velocity potential function (ϕ) is given by an expression (7)

$$\phi = \frac{-xy^3}{3} - x^2 + \frac{x^3 y}{3} + y^2$$

(i) Find the velocity components in x and y directions.
(ii) Show that ϕ represents a possible case of flow.

(b) Write short notes on the following: (8)
(i) Vortex tube
(ii) Doublet
(iii) Irrotational flow
(iv) Vorticity

OR

VII. (a) The velocity vector in a fluid flow is given $V = 4x^3 i - 10x^2 y\ j + 2t\,k$ (8)
Find the velocity and acceleration of a fluid particle at (2, 1, 3) at time t = 1.

(b) Write short notes on the following: (7)
(i) Convective acceleration
(ii) Drag and Lift
(iii) Equation of streamline

VIII. Derive Prandtl's boundary layer equations. (15)

OR

IX. Write short notes on the following: (15)
(i) Skin friction drag
(ii) Momentum integral equation

***

BTS – III(S) – 11.14 – 0997 Reg. No. [ ]

B

B.Tech. Degree III Semester Examination November 2014

ME 1305 METALLURGY AND MATERIAL SCIENCE

(2012 Scheme)

Time : 3 Hours Maximum Marks : 100

PART A

(Answer *ALL* questions)

(8 × 5 = 40)

I. (a) Draw the miller indices for the following planes.
   (i) (100)
   (ii) (111)
   (iii) (101)
   (iv) (110)

(b) State Fick's law of diffusion.

(c) What are the limitations of phase diagram?

(d) What is precipitative hardening?

(e) Draw the characteristics for elastic, anelastic and visco-elastic behaviour of materials.

(f) What is fatigue?

(g) What are the applications of magnesium alloys?

(h) Write a note on nanomaterial.

PART B

(4 × 15 = 60)

II. (a) Find out the co-ordination number, APF of BCC, FCC and HCP crystals along with neat sketches. (10)

(b) Write a note on Polymorphism. (5)

OR

III. Explain the mechanism of nucleation. (15)

IV. Explain the Cd-Bi and Pb-Sn phase diagrams. (15)

OR

V. (a) Explain the process of stress relieving of steels. (10)

(b) What is induction hardening? (5)

VI. (a) Explain the mechanism of twinning. (7)

(b) What is recovery, recrystallisation and grain growth? (8)

OR

VII. (a) What is creep and describe its mechanism? (7)

(b) Explain fracture mechanism. (8)

VIII. (a) What are the applications of tool steels? (7)

(b) What are the various types of cast irons? (8)

OR

IX. Describe the role of refractory materials with examples. (15)

***

BTS –III–11.14–1015 Reg. No. | | | | | | | | |

C

B. Tech. Degree III Semester Examination November 2014

ME 1306 MACHINE DRAWING

(2012 Scheme)

Time: 4 Hours Maximum Marks: 100

I. (a) Draw the front and top views of a hexagonal headed bolt of size M30. The length of the bolt is 100 mm and the thread length is 60 mm. Indicate all dimensions of the drawing with respect of the diameter of the bolt. (15)

(b) Draw a Lewis foundation bolt for $\phi 30$ mm and indicate standard proportions on the drawing. (15)

OR

II. Draw half sectional elevation and side view of a Knuckle joint for connecting rods of 30 mm diameter. Indicate approximate proportions. (30)

III. Fig 1 shows an isometric view of a protected type flanged coupling. Draw the following views to 1:1 scale. (30)

(i) Top half sectional elevation

(ii) End view looking from the right hand side

OR

IV. Details of a plummer block are shown in Fig 2. Draw the following views (30)

(i) Right half sectional elevation

(ii) Plan

V. Details of a lathe tail stock are shown in Fig 3. Assemble the parts and draw the sectional elevation. (40)

OR

VI. Details of a Rams bottom safety valve are given in Fig 4. Assemble the parts and draw half sectional elevation. (40)

(Figures overleaf)

(P.T.O.)

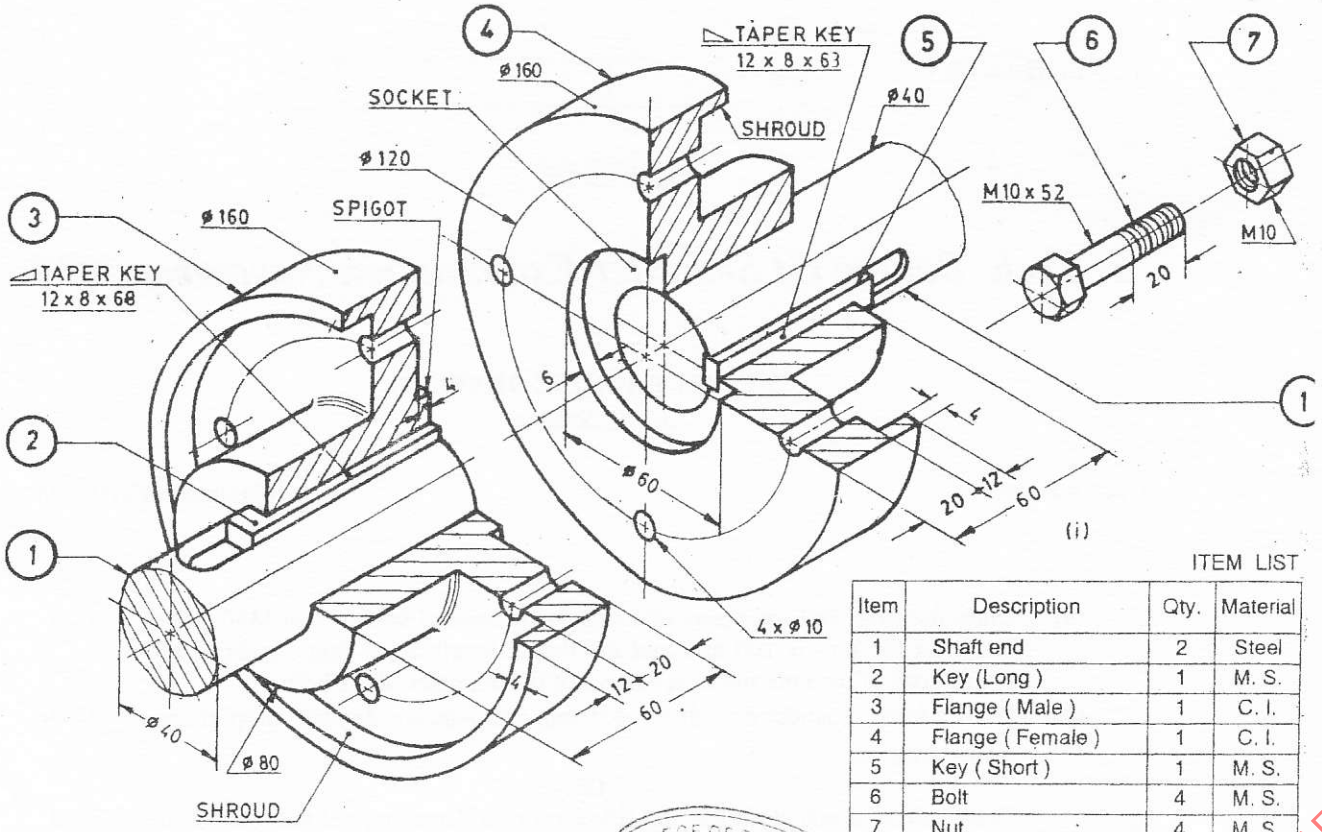

Fig 1

ITEM LIST

Item	Description	Qty.	Material
1	Shaft end	2	Steel
2	Key (Long)	1	M. S.
3	Flange (Male)	1	C. I.
4	Flange (Female)	1	C. I.
5	Key (Short)	1	M. S.
6	Bolt	4	M. S.
7	Nut	4	M. S.

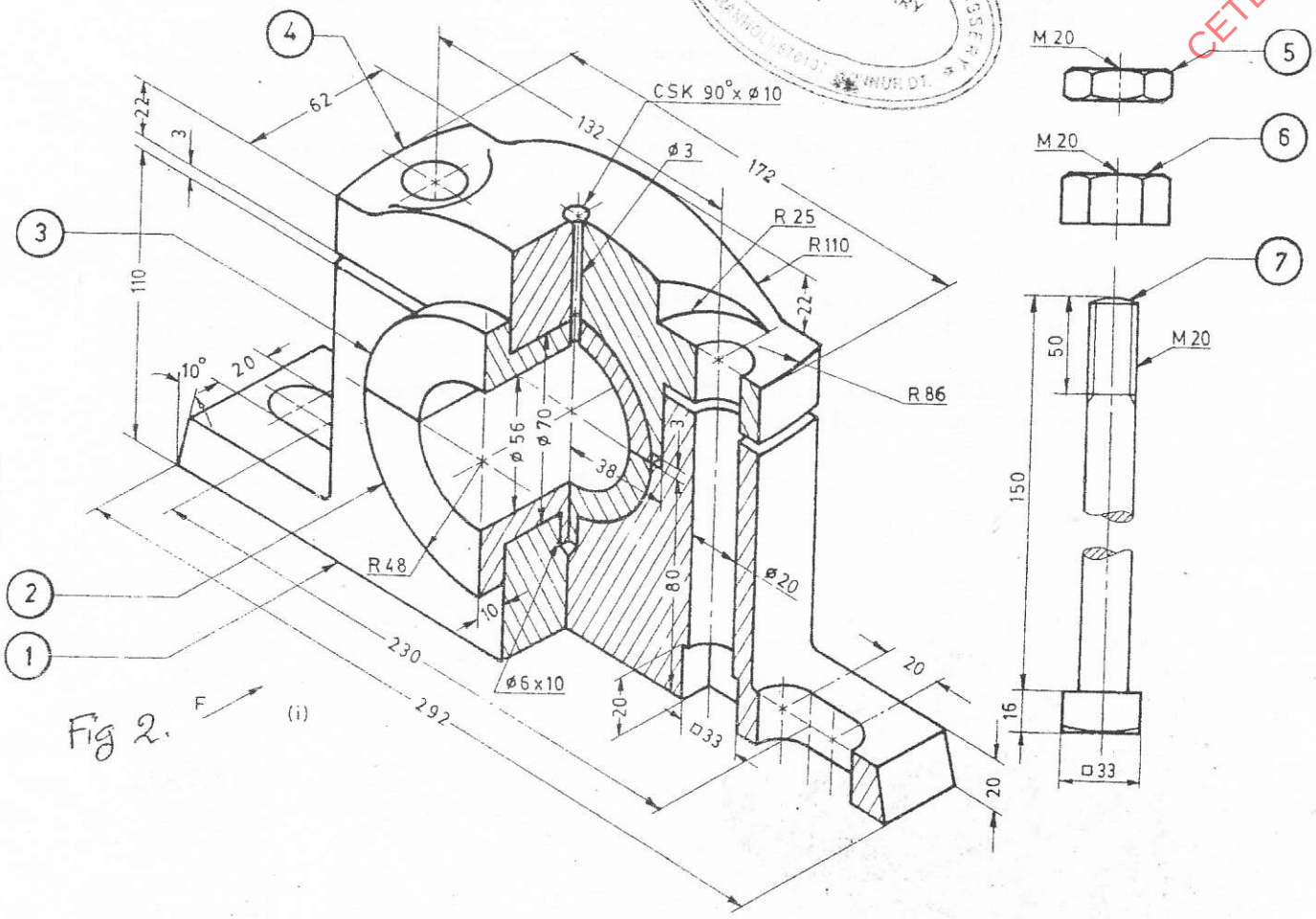

Fig 2.

(Contd....3)

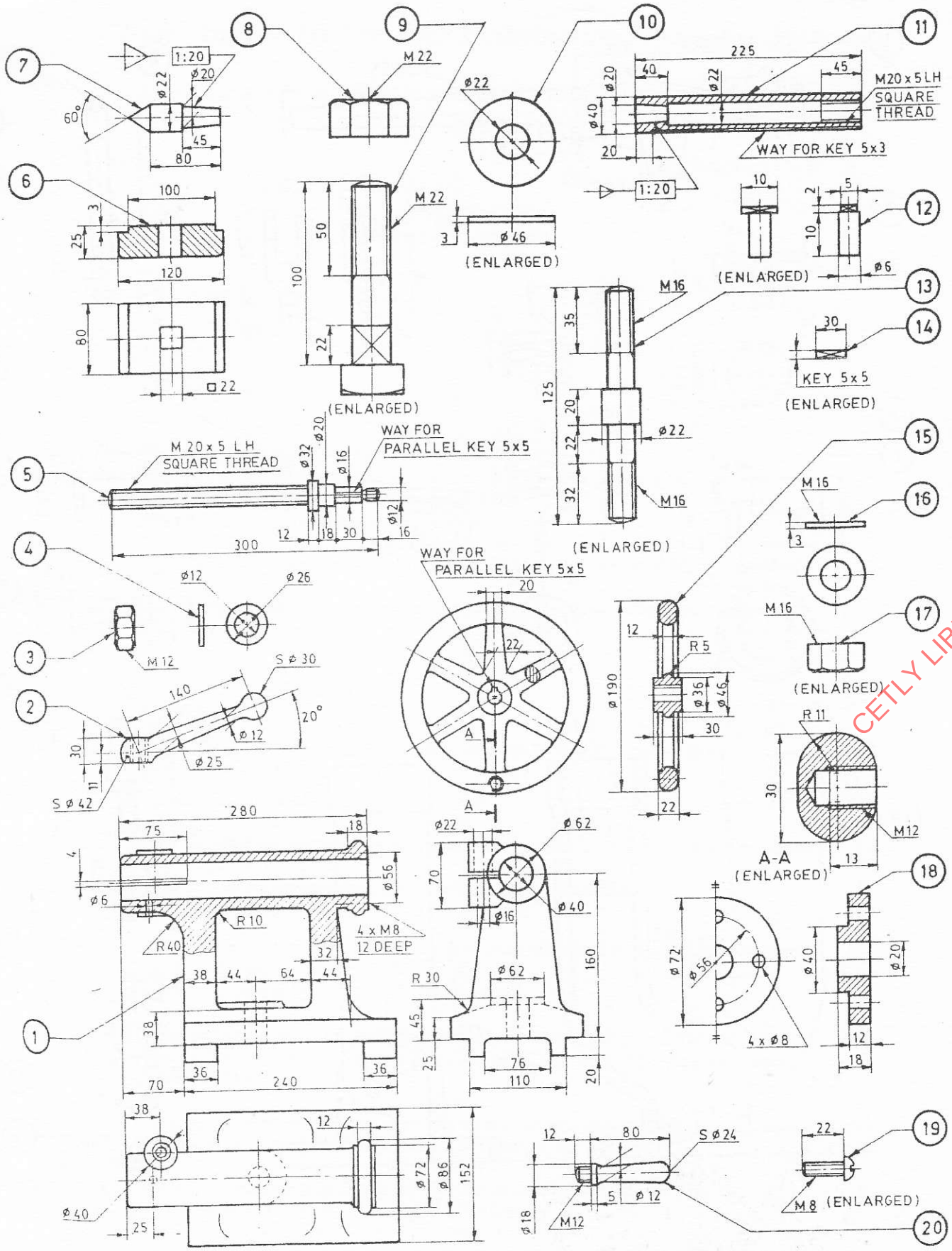

Fig 3 **LATHE TAIL STOCK**

(Contd....4)

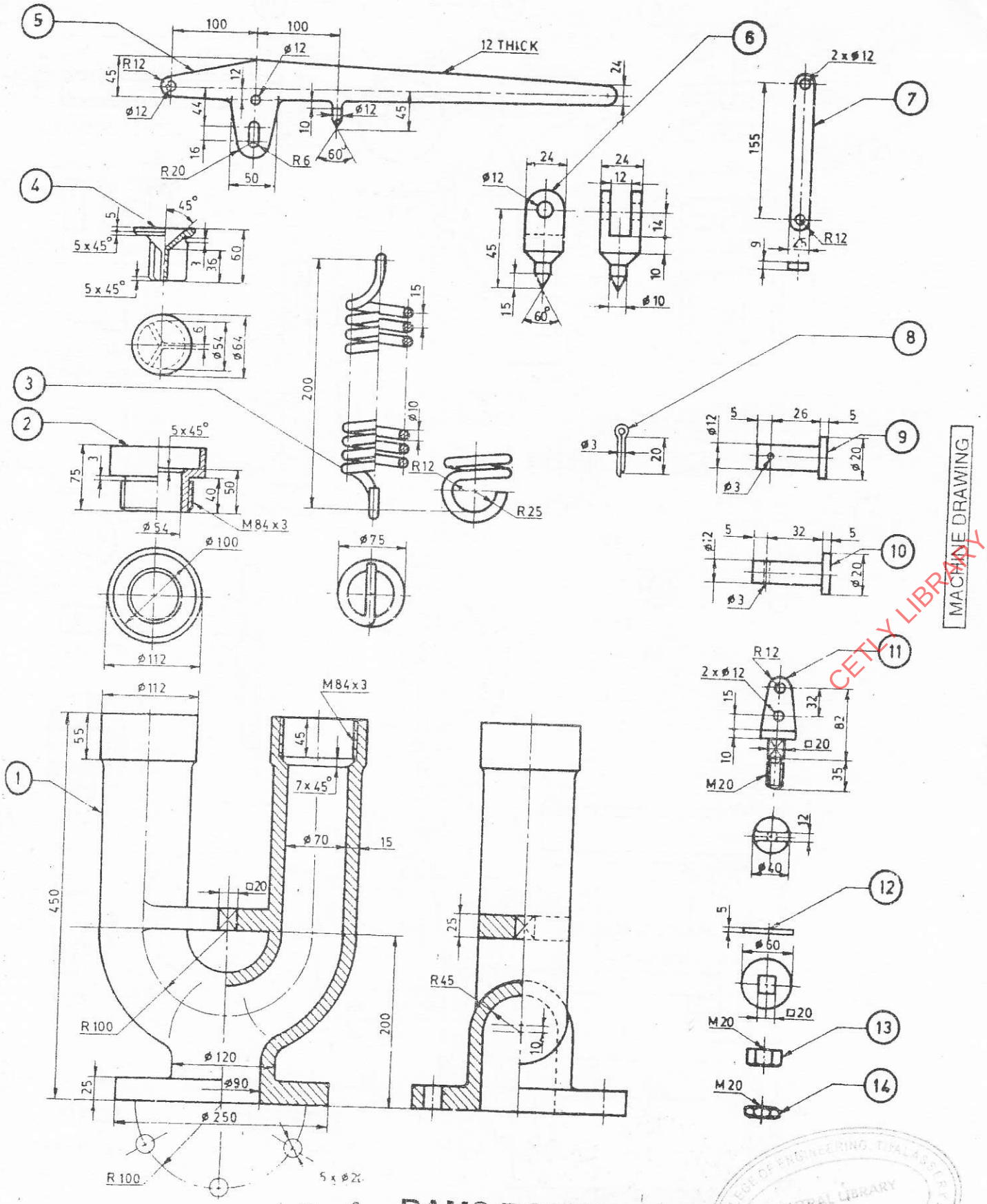

Fig. 4 RAMS BOTTOM SAFETY VALVE

***