B.Tech. Degree III Semester Examination November 2013

IT/CS/EC/CE/ME/SE/EB/EI/EE/FT 301 ENGINEERING MATHEMATICS II

(2006 Scheme)

Time : 3 Hours Maximum Marks : 100

PART A

(Answer *ALL* questions)

$(8 \times 5 = 40)$

I. (a) Examine the following system of equations for consistency

$$2x - 3y + 7z = 5$$
$$3x + y - 3z = 13$$
$$2x + 19y - 47z = 32$$

(b) Let $V_1 = (1,-1,0)$, $V_2 = (0,1,-1)$ and $V_3 = (0,0,1)$ be elements of R^3. Show that the set of vectors $\{V_1, V_2, V3\}$ is linearly independent.

(c) Obtain the Fourier series of $f(x) = |x|$ in $-\pi < x < \pi$, $f(x+2\pi) = f(x)$

(d) Find the Fourier cosine transform of

$$f(x) = \begin{cases} x & \text{for } 0 < x < 1 \\ 2 - x & \text{for } 1 < x < 2 \\ 0 & \text{for } x > 2 \end{cases}$$

(e) Find the Laplace transform of $\dfrac{\cos at - \cos bt}{t}$.

(f) Find the inverse Laplace transform of $\log\left(\dfrac{s+a}{s+b}\right)$

(g) Find a unit vector perpendicular to the surface $x^3 - xyz + z^3 = 1$ at $(1, 1, 1)$.

(h) Find the work done in moving a particle in the force field $F = 3x^2\vec{e} + (2xz - y)\vec{j} + z\vec{k}$ along the straight line from (0, 0, 0) to (2, 1, 3).

PART B

$(4 \times 15 = 60)$

II. (a) Using elementary transformation reduce the following matrix to its normal form. (7)

$$\begin{bmatrix} 1 & 2 & 0 & -1 \\ 3 & 4 & 1 & 2 \\ -2 & 3 & 2 & 5 \end{bmatrix}$$

(b) Find the eigen values and eigen vectors of the matrix $\begin{bmatrix} 6 & -2 & 2 \\ -2 & 3 & -1 \\ 2 & -1 & 3 \end{bmatrix}$. (8)

OR

III. (a) Using Cayley Hamilton theorem find A^{-1} if $A = \begin{bmatrix} 1 & 1 & 3 \\ 1 & 3 & -3 \\ -2 & -4 & -4 \end{bmatrix}$. (8)

(b) $T : R^4 \to R^3$ (7)

$$T\begin{bmatrix} x \\ y \\ z \\ w \end{bmatrix} = \begin{bmatrix} x + y + w \\ z \\ y + 2w \end{bmatrix}.$$

Find $Ker(T)$ and $ran(T)$ and their dimensions.

(P.T.O.)

IV. (a) Obtain a half range cosine series for (8)

$$f(m) = kx \quad \text{for } 0 \le x \le \ell/2$$
$$= k(\ell - x) \quad \text{for } \ell/2 \le x \le \ell$$

Deduce the sum of the series $\frac{1}{1^2} + \frac{1}{3^2} + \frac{1}{5^2} + \ldots\ldots$

(b) Solve the integral equation (7)

$$\int_0^\infty f(x) \sin tx \, dx = 1 \quad 0 \le t < 1$$
$$2 \quad 1 \le t < 2$$
$$0 \quad t \ge 2$$

OR

V. (a) If $f(x) = |\cos x|$ expand $f(x)$ as a Fourier series in the interval $(-\pi, \pi)$. (8)

(b) Using the Fourier integral representation show that (7)

$$\int_0^\infty \frac{\omega \sin x\omega}{1+\omega^2} d\omega = \frac{\pi}{2} e^{-x} \quad (x > 0).$$

VI. (a) Find the Laplace transform of the periodic function and using this find the Laplace transform of the function (10)

$$f(t) = \sin \omega t \quad 0 < t < \pi/\omega$$
$$0 \quad \pi/\omega < t < \frac{2\pi}{\omega}$$

(b) Apply convolution theorem to evaluate $L^{-1}\left[\frac{1}{s(s^2+4)}\right]$. (5)

OR

VII. (a) Use Laplace transform method to solve $\frac{d^2x}{dt^2} + 9x = \cos 2t$ if $x(0) = 1$, $x(\pi/2) = -1$. (5)

(b) Find the inverse Laplace transform (10)

(i) $\frac{s+1}{s^2+4s+5}$

(ii) $\frac{s^2+6}{(s^2+1)(s^2+4)}$

VIII. (a) Prove that $curl(grad\,\phi) = 0$. (6)

(b) Apply Stoke's theorem to evaluate $\int_C ydx + zdy + xdz$ where C is the curve of intersection of $x^2 + y^2 + z^2 = a^2$ and $x + z = a$. (9)

OR

IX. (a) Verify divergence theorem for $F = 4xz\vec{e} - y^2\vec{j} + yzk$ over the cube bounded by $x = 0,\ x = 1,\ y = 0,\ y = 1,\ z = 0,\ z = 1$. (9)

(b) A vector field is given by $F = (x^2 - y^2 + x)\vec{e} - (2xy + y)\vec{j}$ show that the field is irrotational and find its scalar potential. (6)

***

B.Tech. Degree III Semester Examination November 2013

IT/ME/EC/EB/EI 302 ELECTRICAL TECHNOLOGY

(2006 Scheme)

Time : 3 Hours | Maximum Marks : 100

PART A

(Answer *ALL* questions)

(8 x 5 = 40)

I. (a) Draw and explain the phasor diagram of practical transformer when its is connected to a capacitive load.

(b) Derive the emf equation of a DC generator.

(c) Explain critical field resistance and critical speed from open circuit characteristics of DC shunt generator.

(d) Explain cross magnetising and demagnetizing effect of armature reaction in DC generators.

(e) Discuss on pitch factor, pole pitch distribution factor and coil span with respect to an Alternator.

(f) A 6 pole induction motor is fed from 50Hz supply. If the frequency of rotor emf at full load is 2Hz find full load speed and slip.

(g) Derive the condition for maximum starting torque for 3 phase induction motor.

(h) Explain classification of substations.

PART B

(4 x 15 = 60)

II. (a) Derive the condition for maximum efficiency of single phase transformer. (3)

(b) A 15 KVA, 2300/230V, 50Hz single phase transformer gave the following test data (12)
OC – 2300V, 0.21A, 50IN
SC – 47V, 6A, 160W
(i) Find the equivalent circuit referred to high voltage side
(ii) Calculate full load voltage regulation at 0.8pf lagging when the load voltage is held at 230V.

OR

III. (a) Explain the working of auto transformer with diagram. (5)

(b) A 230/460V transformer has a primary resistance of 0.2Ω and a reactance of 0.5Ω and corresponding values for the secondary are 0.75Ω and 1.8Ω respectively. Find the secondary terminal voltge when supplying (i) 10A at 0.8 pf lagging (ii) 10A at .8pf leading. (10)

IV. (a) Explain power flow diagram of DC generator. (5)

(b) A short shunt compound generator supplies a load current of 100A at 250V. The generator has the following winding resistances shunt field 130Ω, armature 0.1Ω and series field 0.1Ω. Find the emf generated, if brush drop is 1V per brush. (10)

OR

V. (a) Discuss on various methods of speed control of DC series motors. (5)

(b) A 250V shunt motor runs at 100rpm at no load and taken 8A. The total armature and field resistances are 0.2Ω and 250Ω respectively. Calculate the speed when loaded and taking 50A. Assume flux to be constant. (10)

(P.T.O.)

VI. (a) Explain the working of synchronous motor at leading and lagging loads. (5)

(b) A 3 phase star connected 1000KVA, 11000V alternator has 52.5A. The AC resistance of winding per phase is 0.45Ω. The test results are given below: (10)
OC – field current = 12.5A, voltage between lines = 422V
SC – field current = 12.5A, Line current = 52.5A.
Determine the full load voltage regulation of alternator at (i) .8pf lag (ii) .8pf lead

OR

VII. (a) Explain the classification of 3 phase AC motors. (5)

(b) A 440V, 50HZ 3 phase induction motor draws an input power of 76KW from the mains. The rotor emf takes 120 complete cycles/minute. Its stator losses are 1KW and rotor current per phase is 62A. Calculate (i) rotor copper losses per phase (ii) torque developed (iii) rotor resistance per phase. (10)

VIII. (a) Explain the working of Thermal Power Plant with neat schematic diagram. (12)

(b) Explain different types of insulators in power system. (3)

OR

IX. (a) Explain different DC transmission schemes. (5)

(b) Explain economic load dispatch. (5)

(c) Discuss on various switch gears in power system. (5)

***

BTS – III – 11.13 –1185

B.Tech. Degree III Semester Examination November 2013

ME 303 MECHANICS OF SOLIDS

(2006 Scheme)

Time : 3 Hours Maximum Marks : 100

PART A

(Answer *ALL* questions)

$(8 \times 5 = 40)$

I. (a) Define stress, strain and elasticity. Derive a relation between stress and strain of an elastic body.

(b) Explain the procedure for finding the stresses developed in a body due to change of temperature.

(c) Calculate the maximum torque that a shaft of 125mm diameter can transmit, if the maximum angle of twist is 1° in a length of 1.5m. Take modulus of rigidity as 70GPa.

(d) A cantilever beam AB, 2m long carries a uniformly distributed load of 1.5kN/m over a length of 1.6m from the free end. Draw the shear force and bending moment diagram for the beams.

(e) A wooden beam 100mm wide, 250mm deep and 3m long is carrying a uniformly distributed load of 40kN/m. Determine the maximum shear stress and sketch the variation of shear stress along the depth of the beam.

(f) Briefly explain Rankine's failure theory.

(g) A simply supported beam of span 4m is carrying a uniformly distributed load of 2kN/m over the entire span. Find the maximum slope and deflection of the beam. Take EI for the beam as 80×10^9 N-mm^2.

(h) List the assumptions in Euler's column theory.

PART B

$(4 \times 15 = 60)$

II. A circular steel bar ABCD, rigidly fixed at A and D is subjected to axial loads of 50kN and 100kN at B and C as shown in figure. Find the loads shored by each part of the bar and displacements of the points B and C. Take E for steel as 200GPa. (15)

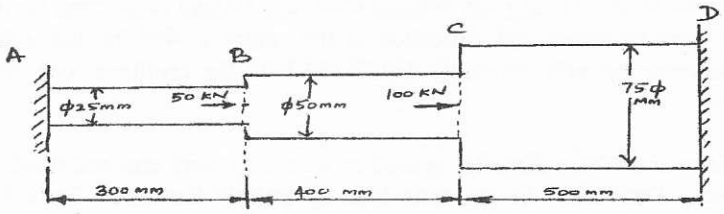

OR

(P.T.O.)

III. (a) A plane element in a boiler is subjected to tensile stresses of 400MPa and 150MPa on the other at right angles to the former. Each of the above stresses is accompanied by a shear stress of 100MPa such that when associated with the minor tensile stress tends to rotate the element is anti clockwise direction. Find (i) principal stresses and their directions in maximum shearing stresses and the directions of the plane on which they act. (10)

(b) An axial pull of 20kN is suddenly applied on a steel rod 2.5m long and 1000 mm^2 in cross section. Calculate the strain energy, which can be absorbed in the rod. Take E = 200GPa. (5)

IV. Power of 2250KW has to be transmitted at 1Hz. If the permissible shear stress is 80N/mm^2, determine the necessary diameter for a solid shaft of circular section. If a hollow circular section is used with its internal diameter equal to 0.75 times the external diameter, calculate the saving in mass per metre length of the shaft. (15)

OR

V. (a) A simply supported beam of 4m effective span, has a load of 120kN/m uniformly distributed over 0.5m 0.75 metre away from the centre towards the right. Construct the shear force and bending moment diagram. (10)

(b) Derive the relationship between modulus of elasticity and modulus of rigidity. (5)

VI. (a) An I section beam 350mm × 20mmm has a web thickness of 12.5m and a flange thickness of 25mm. It carries a shearing force of 200kN at a section. Sketch the shear stress distribution across the section. (10)

(b) List the assumptions in the theory of simple bending. (5)

OR

VII. (a) A cast iron water pipe of 500mm inside diameter and 20mm thick is supported over a span of 10 metres. Find the maximum stress in the pipe metal, when the pipe is running full. Take density of cast iron as 70.6kN/m^3 and that of water as 9.8 kN/m^3. (8)

(b) A hollow square section with outer and inner dimensions of 50mm and 40mm respectively is used a cantilever of span 1m. How much concentrated load can be applied at the free end of the cantilever, if the maximum bending stress is not to exceed 35MPa? (7)

VIII. (a) A propped cantilever beam 3m long has 100mm wide and 150mm deep cross section. If the allowable bending stress and deflection at the centre is 45MPa and 2.5mm respectively, determine the safe uniformly distributed load the cantilever can carry. Take E = 120GPa. (10)

(b) A steel rod 5m long and 40mm diameter is used as a column, with one end fixed and the other end free. Determine the crippling load by Euler's formula. Take E as 200GPa. (5)

OR

IX. A T section 150mm × 120mm × 20mm is used as a strut of 4m long, hinged at both its ends. Calculate the crippling load, if Young's modulus for the material is 200GPa. (15)

***

BTS – III – 11.13 – 1200

B.Tech. Degree III Semester Examination November 2013

ME 304 FLUID MECHANICS

(2006 Scheme)

Time : 3 Hours Maximum Marks : 100

PART A

(Answer *ALL* questions)

(8 x 5 = 40)

I. (a) Define surface tension and capillarity.

(b) Differentiate between the Eulerian and Lagrangian method of representing fluid motion.

(c) Distinguish between Notches and Weirs.

(d) What is pitot tube? How will you determine the velocity at any point with the help of pitot tube?

(e) What do you understand by the terms convective and local acceleration?

(f) Distinguish between source and sink flow.

(g) Define physically and mathematically the concept of displacement thickness.

(h) Discuss on the circulation and vorticity?

PART B

(4 x 15 = 60)

II. (a) Explain the stability of submerged and floating bodies. (9)

(b) Two horizontal flat plates are placed 0.15mm apart and the space between them is filled with oil of viscosity 1 poise. The upper plate area $1.5m^2$ is required to move with a speed of 0.5m/s relative to the lower plate. Determine the necessary force and the power required to maintain this speed. (6)

OR

III. (a) Explain the different types of fluid flow. (7)

(b) A wooden block (specific gravity = 0.7) of width 15cm, depth 30cm and length 150cm floats horizontally on the surface of seawater (specific weight = 10kN). Calculate (i) depth of immersion (ii) Position of centre of buoyancy and (iii) Metacentric height. (8)

IV. (a) Derive Euler's equation of motion along a stream line and hence derive the Bernoulli's equation. (9)

(b) A pipe 300 metres long and has a slope of 1 in 100 and taper from 1 metre diameter at the high end and 0.5 metre at the lower end. Quantity of water flowing is 5400 litres/minute. If the pressure at high end is 70 Kpa. Find the pressure at the lower end. (6)

OR

V. (a) Derive Darcy's equation for head loss due to friction in pope flow. (8)

(b) Water discharges at the rate of 98.2 litre per second through a 12cm diameter vertical sharp edged orifice placed under a constant head of 10 metres. A point on the jet measures from the vena contracta has coordinates 4.5 metres horizontal and 0.5 metre vertical. Find the hydraulic coefficients C_v, C_c and C_d of the orifice. (7)

(P.T.O)

VI. A fluid flow is given by $V = x^2yi + y^2zj - \left(2xyz + yz^2\right)K$. Prove that it is a case of possible steady incompressible flow. Calculate the velocity and acceleration at the point (2,1,3). (15)

OR

VII. (a) Explain the velocity potential function and stream function. (6)

(b) In a two dimensional incompressible flow the fluid velocity components are given by $u = x - 4y$ and $v = y - 4x$. Show that the velocity potential exists and determine its form. Find the stream function also. (9)

VIII. Experiments were conducted in a wind tunnel with a wind speed of 50km/hr. on a flat plate of size 2 metre long and 1 metre wide. The density of air is 1.15 Kg/m^3. The coefficient of lift and drag force are 0.75 and 0.15 respectively. Determine (15)
(i) Lift force (ii) Drag force (iii) Resultant force (iv) Direction of resultant force
(v) Power exerted by the plate.

OR

IX. (a) What do you mean by boundary layer separation? What is the effect of pressure gradient on boundary layer separation? (7)

(b) Explain the flow visualization techniques. (8)

***

BTS – III– 11.13 – 1216

B.Tech. Degree III Semester Examination November 2013

ME 305 METALLURGY AND MATERIAL SCIENCE

(2006 Scheme)

Time : 3 Hours Maximum Marks : 100

PART A

(Answer *ALL* questions)

(8 x 5 = 40)

I. (a) A metal having a cubic structure has a density of $2.6 g/cm^3$ an atomic weight of 87.62g/mol and a lattice parameter of 6.0848°A. Determine the crystal structure.

(b) Discuss the metallurgical application of diffusion.

(c) Briefly explain Hume-Rothery rules and explain the rationale

(d) What is the principle of surface hardening of steels using carburizing and nitriding? Explain any one of them.

(e) Discuss the theory for plastic deformation.

(f) Explain the significance of ductile to brittle transition temperature.

(g) Comment on bearing metal.

(h) What are some of the major applications of copper alloys?

PART B

(4 x 15 = 60)

II. (a) Sketch within a cubic unit cell the following planes and directions (8)
(012), (313), (211), [211], [301]

(b) Distinguish between homogeneous and heterogeneous nucleation. (7)

OR

III. (a) Distinguish between edge and screw dislocations. (5)
(b) Distinguish between twin and twist boundaries. (5)
(c) Explain the mechanism of diffusion. (5)

IV. (a) What are the different types of solid solution? Explain. (5)
(b) Explain the eutectic and eutectoid reaction. (5)
(c) Discuss on the Cu-Ni phase diagram. (5)

OR

V. (a) Explain why steel become very hard upon quenching from high temperature. (5)
(b) Explain the annealing and normalizing heat treatment process. (5)
(c) Discuss briefly on metal coating. (5)

VI. (a) Compare elastic and anelastic deformation. (5)
(b) What is the principle of precipitation hardening? Discuss. (5)
(c) Distinguish between recovery and recrystallisation process. (5)

OR

VII. (a) Explain the mechanism of creep. (5)
(b) Explain the Griffith's theory on brittle fracture. (5)
(c) Discuss the mechanism of fatigue. (5)

VIII. (a) What are the different types of cast irons? Explain. (8)
(b) What are the different classes of steels? Explain. (7)

OR

IX. (a) What is the function of alloying elements of steels? Discuss their functions briefly. (7)
(b) What are the properties and uses of commercial alloys of Aluminium and Magnesium? (8)

***

B.Tech. Degree III Semester Examination November 2013

ME 306 MACHINE DRAWING

(2006 Scheme)

Time : 4 Hours Maximum Marks : 100

I. (a) Draw an elevation of a cotter foundation bolt for a diameter of 25mm. Indicate all dimensions. Standard proportions are to be followed. (10)

(b) An isometric view of a socket and spigot joint is shown in the figure. Draw a top half sectional elevation and an end view from left on the right hand side of the elevation. (20)

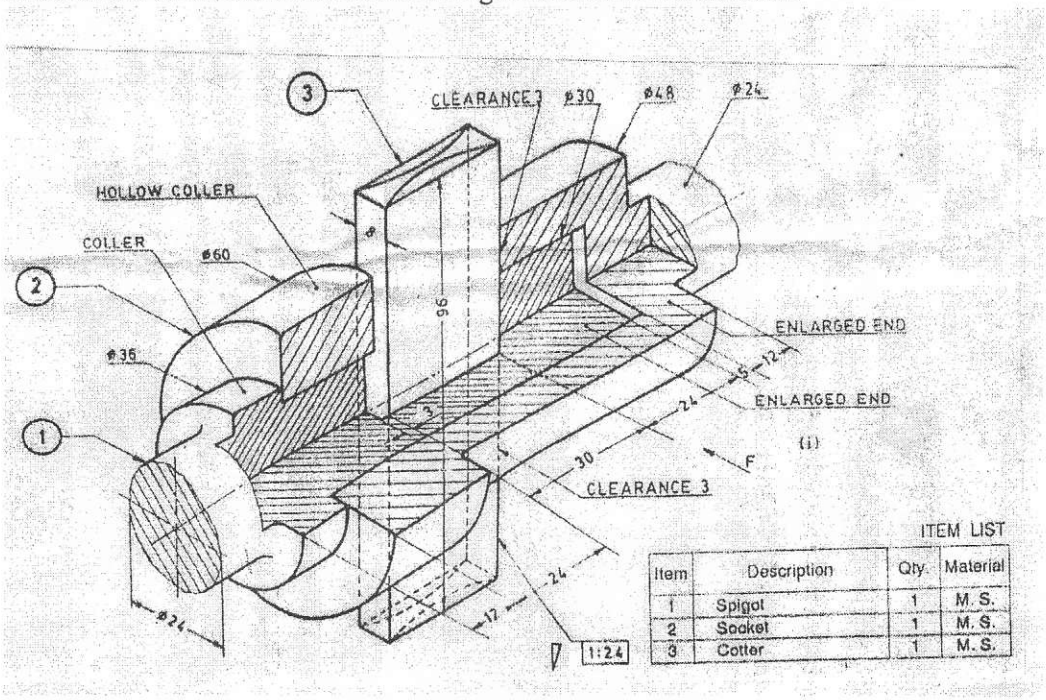

Item	Description	Qty.	Material
1	Spigot	1	M. S.
2	Socket	1	M. S.
3	Cotter	1	M. S.

OR

II. (a) Draw the three views of a hexagonal headed bolt of size M24. The length of the bolt is 80mm and the thread length is 54mm. Indicate all dimensions on the drawing in terms of the diameter of the bolt. (10)

(b) An isometric view of a sleeve and cotter joint is shown in the figure. Draw the following views to 1:1 scale. (20)

(i) Top half sectional elevation and

(ii) Bottom half sectional plan.

Indicate all dimensions as per Indian Standards.

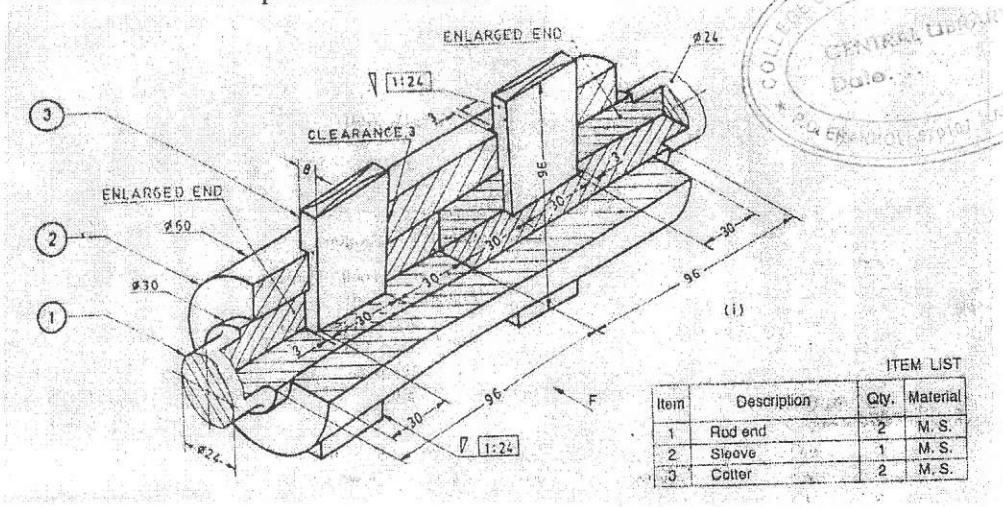

Item	Description	Qty.	Material
1	Rod end	2	M. S.
2	Sleeve	1	M. S.
3	Cotter	2	M. S.

(P.T.O)

III. An isometric view of a flanged coupling (unprotected type) is shown in the figure. Draw the top half sectional elevation of the coupling. Also add an end view looking from the bolt head side. End view need not be dimensioned. (30)

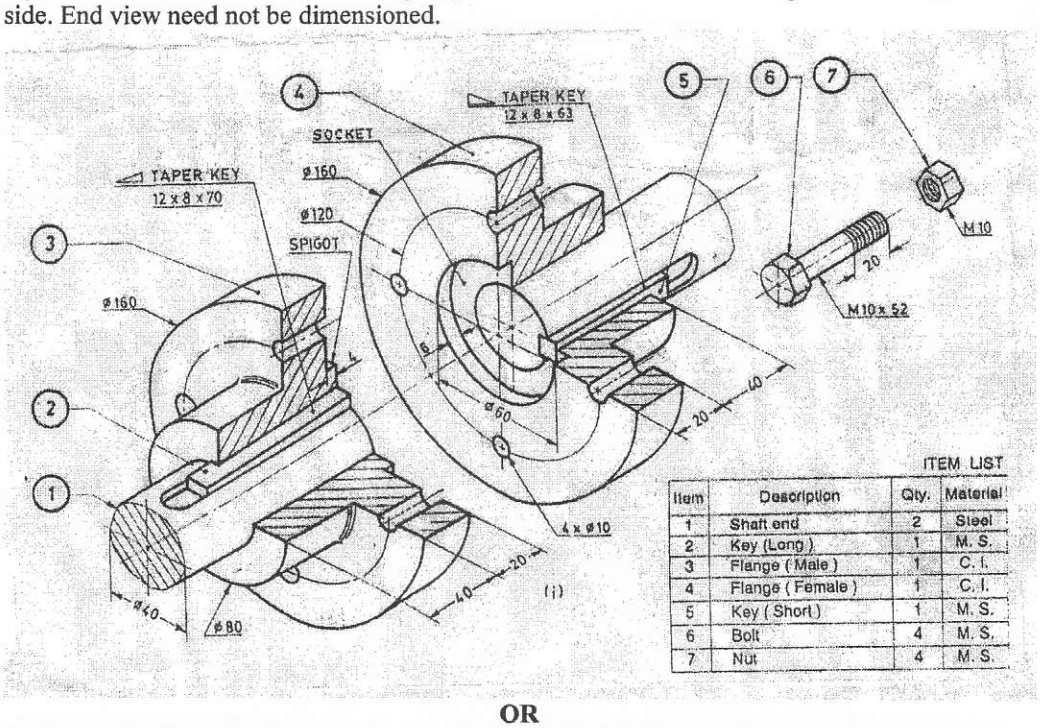

ITEM LIST

Item	Description	Qty.	Material
1	Shaft end	2	Steel
2	Key (Long)	1	M. S.
3	Flange (Male)	1	C. I.
4	Flange (Female)	1	C. I.
5	Key (Short)	1	M. S.
6	Bolt	4	M. S.
7	Nut	4	M. S.

OR

IV. An isometric view of a foot step bearing is shown in the figure. Draw the following views of the bearing. (30)

(i) Right half sectional elevation in the direction F and

(ii) Top view.

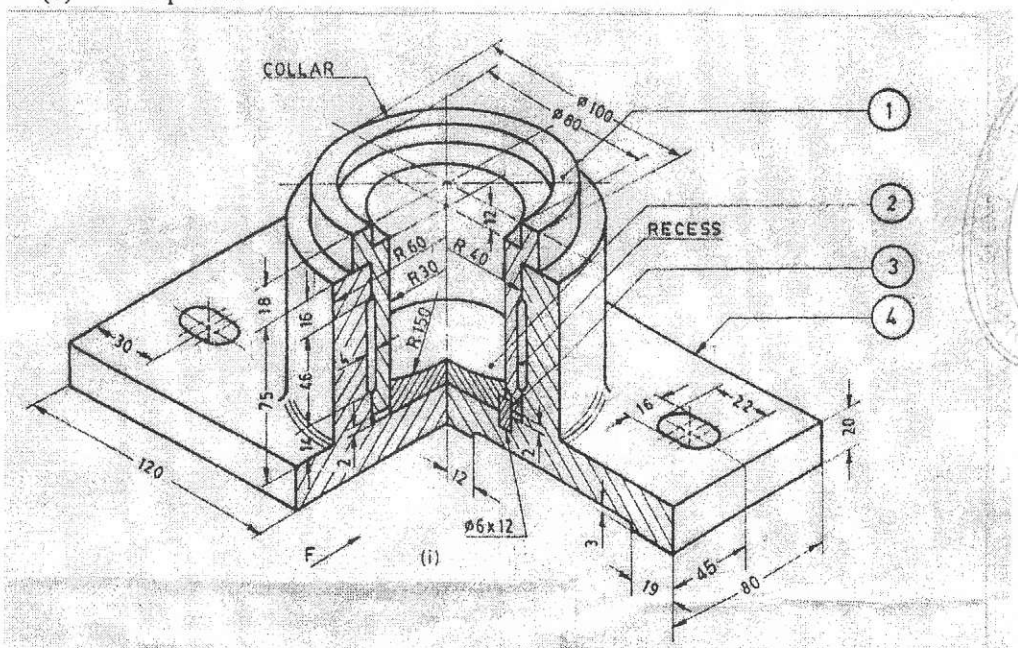

ITEM LIST

Item	Description	Qty.	Material
1	Bush	1	G. M.
2	Pad	1	G. M.
3	Snug	1	Steel
4	Block	1	C. I.

V. Details of a machine vice are shown in the figure in first angle projection. Draw the following views showing all parts assembled in working position to scale 1:1. (40)

(i) Full sectional front elevation and (ii) Plan, upper half in section.

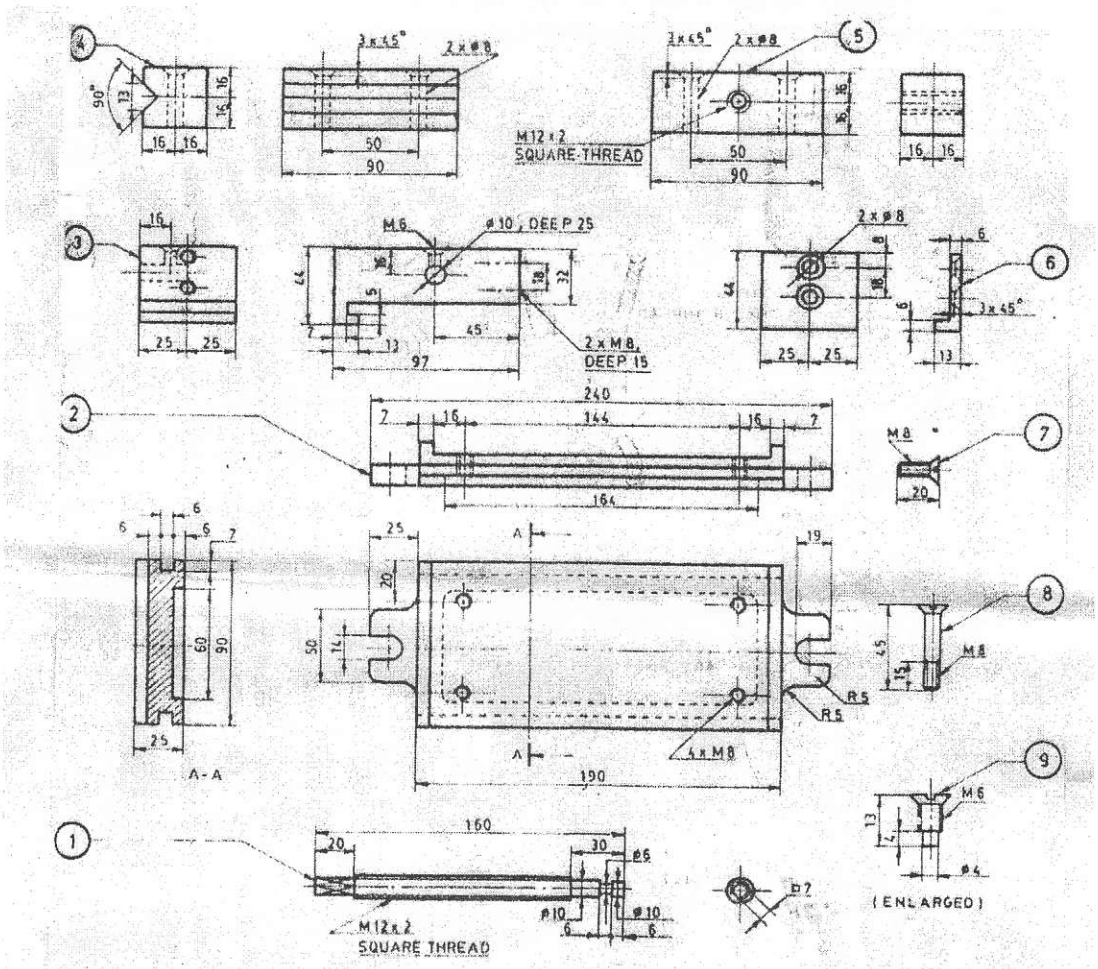

ITEM LIST

Item	Description	Qty.	Material
1	Screw spindle	1	M. S
2	Base	1	C. I.
3	Sliding jaw	1	C. S.
4	Fixed jaw	1	C. S.
5	Block	1	C. I.
6	End plate	1	M. S.
7	Set screw	2	M. S.
8	Screw (M8)	4	M. S.
9	Screw (M6)	2	M. S.

OR

(Contd.....4)

VI. Details of an I.C.engine connecting rod (Type 2) are shown in the figure. Draw to 2:1 scale, the following assembled views showing all dimensions as per B.I.S. (40)

(i) Elevation top half in section and (ii) Top view

All missing dimensions may be suitably assumed.

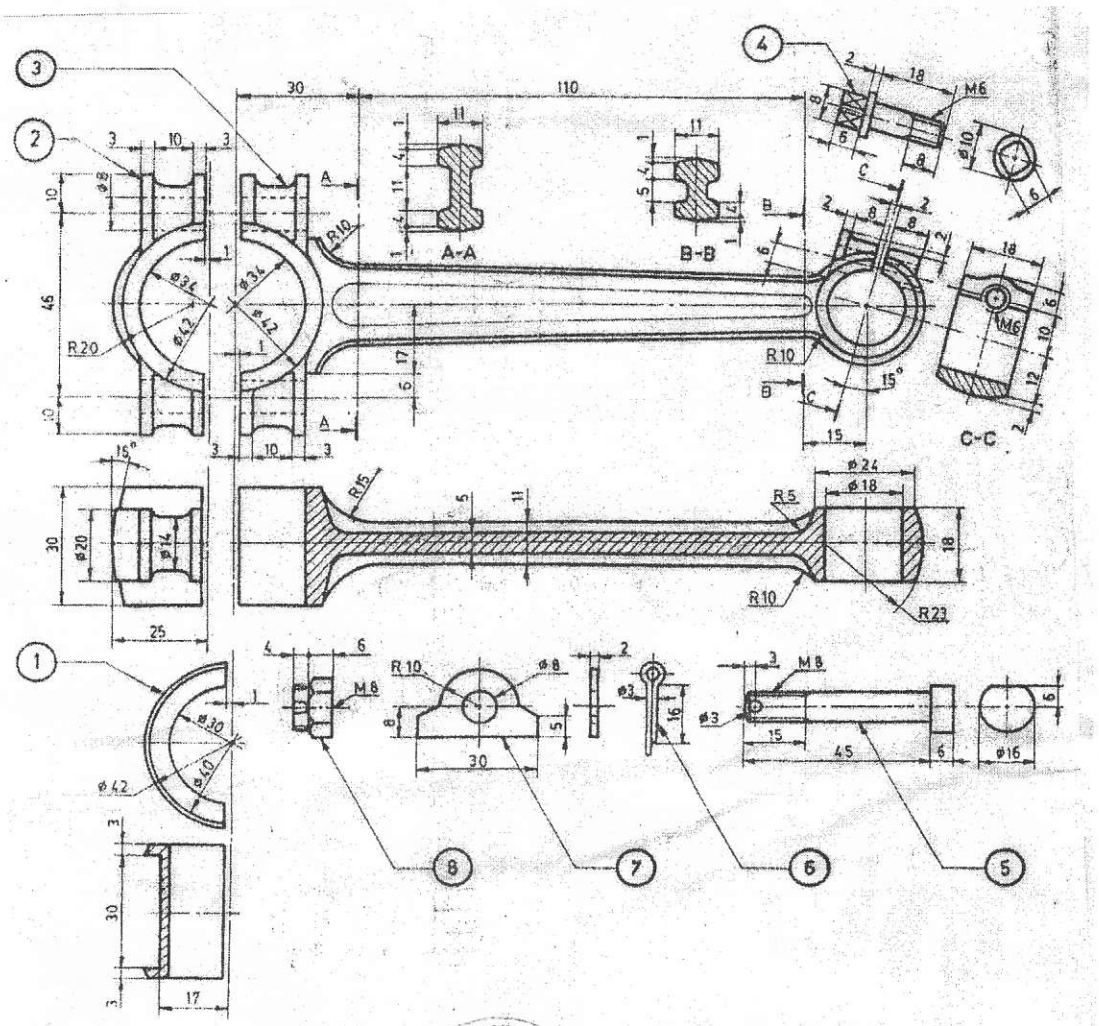

ITEM LIST

Item	Description	Qty.	Material
1	Big end bush (Half)	2	Bronze
2	Cap	1	Duralumin
3	Body	1	Duralumin
4	Set screw	1	Steel
5	Bolt	2	Steel
6	Split pin	2	M.S.
7	Shim	2	Bronze
8	Castle nut	2	Steel

***