BTS –III–11.14–0965 Reg. No. | | | | | | | | |

D

B. Tech. Degree III Semester Examination November 2014

ME 303 MECHANICS OF SOLIDS

(2006 Scheme)

Time: 3 Hours Maximum Marks: 100

PART A

(Answer *ALL* questions)

(8 x 5 = 40)

I. (a) State and explain Hooke's law.
(b) Explain Mohr's circle.
(c) Derive the relationship between modulus of elasticity and modulus of rigidity.
(d) Define shear force, bending moment and moment of resistance.
(e) Derive the simple bending equation.
(f) Explain maximum principle stress theory and maximum shear stress theory.
(g) Explain moment area method of determining the deflection of a beam.
(h) What are the different assumptions made in the Buckling theory?

PART B

(4 x 15 = 60)

II. A steel rail is 12.6 m long and is laid at a temperature of 24°C. The maximum temperature expected is 44°C. Calculate: (15)
(i) The minimum gap between two rails to be left so that temperature stresses do not develop.
(ii) Calculate the thermal stresses developed in the rails if (a) No expansion joint is provided (b) If a gap of 2 mm is provided for expansion.

OR

III. At a point in a stressed body, the normal stresses are 83 N/mm^2 (tensile) on a vertical plane and 27.5 N/mm^2 (compressive) on a horizontal plane. A shearing stress of 41.4 N/mm^2 acts at this point. Determine and show on a sketch the principle stress and the maximum shearing stress at this point. (15)

IV. Prove that a hollow shaft is stronger and stiffer than a solid shaft of the same material, length and weight. (15)

OR

V. Draw the shear force and bending moment diagram for the beam shown in the figure. (15)

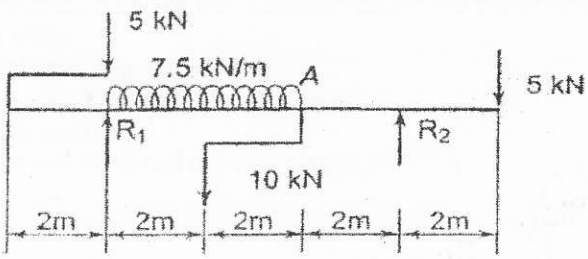

(P.T.O.)

VI. A cast iron beam is of I section with a top flange 80 mm × 20 mm thick, bottom flange 160 mm × 40 mm thick and the web 200 mm deep and 20 mm thick. The beam is freely supported on a span of 5 m. If the tensile stress is not to exceed 20 N/mm^2, find the safe uniformly distributed load which the beam can carry. Find also the maximum compressive stress. (15)

OR

VII. A simply supported beam carries a uniformly distributed load of intensity 30 N/mm over the entire span of 1 m. The cross section of the beam is of T section having the dimensions as shown in figure. Calculate the maximum shear stress for the section of the beam. Also draw the shear stress distribution diagram. (15)

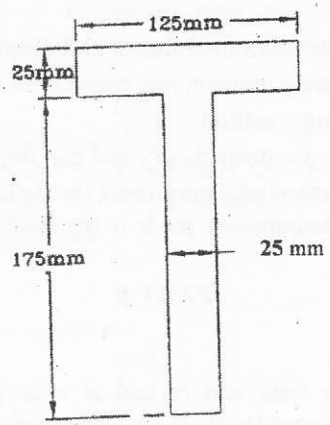

VIII. A beam of length 6 m is simply supported at its ends and carries two point loads of 48 kN and 40 kN at a distance of 1m and 3 m respectively from the left support. Find: (15)

(i) Deflection under each load
(ii) Maximum deflection
(iii) The point at which maximum deflection occurs

OR

IX. A column of timber 15 cm × 20 cm is 6 m long both ends being fixed. If the Young's modulus for the timber is 17.5 kN/mm^2, determine: (15)

(i) Crippling load
(ii) Safe load for the column if factor of safety = 3.

***

BTS –III–11.14–0980 Reg. No. | | | | | | | | |

D

B. Tech. Degree III Semester Examination November 2014

ME 304 FLUID MECHANICS

(2006 Scheme)

Time: 3 Hours Maximum Marks: 100

PART A

(Answer *ALL* questions)

(8 x 5 = 40)

I. (a) Differentiate between Eulerian and Lagrangian methods.

(b) What is Pitot tube? How will you determine the velocity at any point with the help of pitot tube?

(c) How will you determine the loss of head due to friction in pipes using Darcy's formula?

(d) Explain the stream line and path line.

(e) Differentiate between free vortex and forced vortex flow.

(f) Distinguish between source and sink flow.

(g) What do you mean by boundary layer separation? What is the effects of pressure gradient on boundary layer separation?

(h) Define displacement thickness. Derive an expression for the displacement thickness.

PART B

(4 x 15 = 60)

II. (a) What do you understand by total pressure and centre of pressure? (5)

(b) A rectangular plane surface 3 m wide and 4 m deep lies in water in such a way that its plane makes an angle of 30° with the free surface of water. Determine the total pressure and centre of pressure when the upper edge is 2m below the free surface. (10)

OR

III. (a) Explain the terms metacentre and metacentric height and derive an expression for the metacentric height of the floating body. (7)

(b) A solid cylinder of diameter 4 m has a height of 3 m. Find the metacentric height of the cylinder, when it is floating in water with its axis vertical. The specific gravity of the cylinder is 0.6. (8)

IV. Prove that the maximum velocity in a circular pipe for viscous flow is equal to two times the average velocity of flow. (15)

OR

(P.T.O.)

V. (a) What is an Orifice-meter. Prove that the discharge through an Orifice-meter is given by the relation (8)

$$Q = C_d \cdot \frac{a_0 . a_1}{\sqrt{a_1^2 - a_0^2}} \times \sqrt{2gh}$$

(b) The water flowing through a pipe having diameters 20 cm and 10 cm respectively. The rate of flow through a pipe is 35 litre/sec. The large diameter end is 6 m above datum and small diameter end is 4 m above datum. If the pressure at the large diameter section is 39.24 N/cm^2, find the intensity of pressure at small diameter section. (7)

VI. A flow field is given by: (15)

$$V = x^2 y\, i + y^2 z\, j - \left(2xyz + y z^2\right) k$$

Prove that it is a case of possible steady incompressible flow. Calculate the velocity and acceleration at point (2, 1, 3).

OR

VII. (a) Explain the terms circulation and vorticity. (5)

(b) In a two dimensional potential flow, the velocity potential function is given by $\phi = x(2y-1)$. (10)

Determine the velocity at point P (4,5) Also determine also the value of stream function at the above point P.

VIII. Air is flowing over a flat plate 500 mm long and 600 mm wide with a velocity of 4 m/s. The kinematic viscosity of air is $0.15 \times 10^{-4}\, m^2/s$. Find (15)

(i) The boundary layer thickness at the end of the plate.

(ii) The shear stress at 200 mm from the leading edge.

(iii) Drag force on the plate. Assume the velocity profile over the plate as $\frac{U}{V} = \sin\left(\frac{\pi}{2}, \frac{y}{8}\right)$ and density of air as 1.24kg/m^3.

OR

IX. (a) Explain the development of boundary layer. (7)

(b) Explain the flow visualization techniques. (8)

***

BTS.III-11.14-0996 Reg.No. | | | | | | | | |

B

B.Tech. Degree III Semester Examination November 2014

ME 305 METALLURGY AND MATERIAL SCIENCE

(2006 Scheme)

Time : 3 Hours Maximum Marks : 100

PART A

(Answer *ALL* questions)

(8 x 5 = 40)

I. (a) Calculate the Atomic Packing Factor of HCP crystal lattice.

(b) Write a note on dendritic growth in crystals.

(c) Explain, mention peritectic reaction with the help of an example.

(d) How is austempering different from martempering?

(e) What is work hardening?

(f) Draw and explain the S-N curve for high-carbon steels.

(g) Write a note on the applications of SG Cast Iron.

(h) What are magnesium alloys?

PART B

(4 x 15 = 60)

II. (a) Explain line defects. (7)

(b) What are the metallurgical applications of diffusion? (8)

OR

III. (a) What is Burger's Vector? (5)

(b) What is super cooling? Explain the grain structure found in crystals. (10)

IV. (a) What are the application of TTT diagram and CCT diagram? (8)

(b) Compare the properties of Martemite with Pearlite. (7)

OR

V. (a) What is hardenability? (5)

(b) Describe the process of micro coating of materials. (10)

VI. (a) What are the common slip planes and slip directions in ductile materials? (7)

(b) What is Griffth's crack theory? (8)

OR

VII. What are strengthening mechanisms in materials? (15)

VIII. What are the common alloying elements in steel and what properties are induced/improved by using these elements? (15)

OR

IX. (a) Write a note on copper alloys. (7)

(b) Describe the use of grey and white cast irons. (8)

***

BTS –III–11.14–1014 Reg. No. | | | | | | | | |

C

B. Tech. Degree III Semester Examination November 2014

ME 306 MACHINE DRAWING

(2006 Scheme)

Time: 4 Hours Maximum Marks: 100

I. (i) Draw a Lewis foundation bolt for a ϕ 30 mm and indicate standard proportions on the drawing. (30)

(ii) Draw a Ray End type foundation bolt for ϕ 30 mm and indicate standard proportions on the drawing.

(iii) Draw plan and elevation of a nut with a stop plate lock nut arrangement for a bolt of diameter 30 mm.

OR

II. Draw half sectional elevation and side view of a Knuckle joint for connecting rods of 30 mm diameter. Indicate all proportional dimensions on the drawing. (30)

III. Fig 1 shows an isometric view of a protected type flanged coupling. Draw loop half sectional elevation and end views. (30)

OR

IV. Details of a foot step bearing are shown in Fig 2. Draw right half sectional elevation and plan. (30)

V. Details of the tail stock of a lethe are shown in Fig 3. Assemble the parts and draw the sectional elevation. (40)

OR

VI. Parts of a lever safety valve with its dimensions are shown in Fig 4. Assemble the parts and draw its half sectional elevation. (40)

(Figures overleaf)

(P.T.O.)

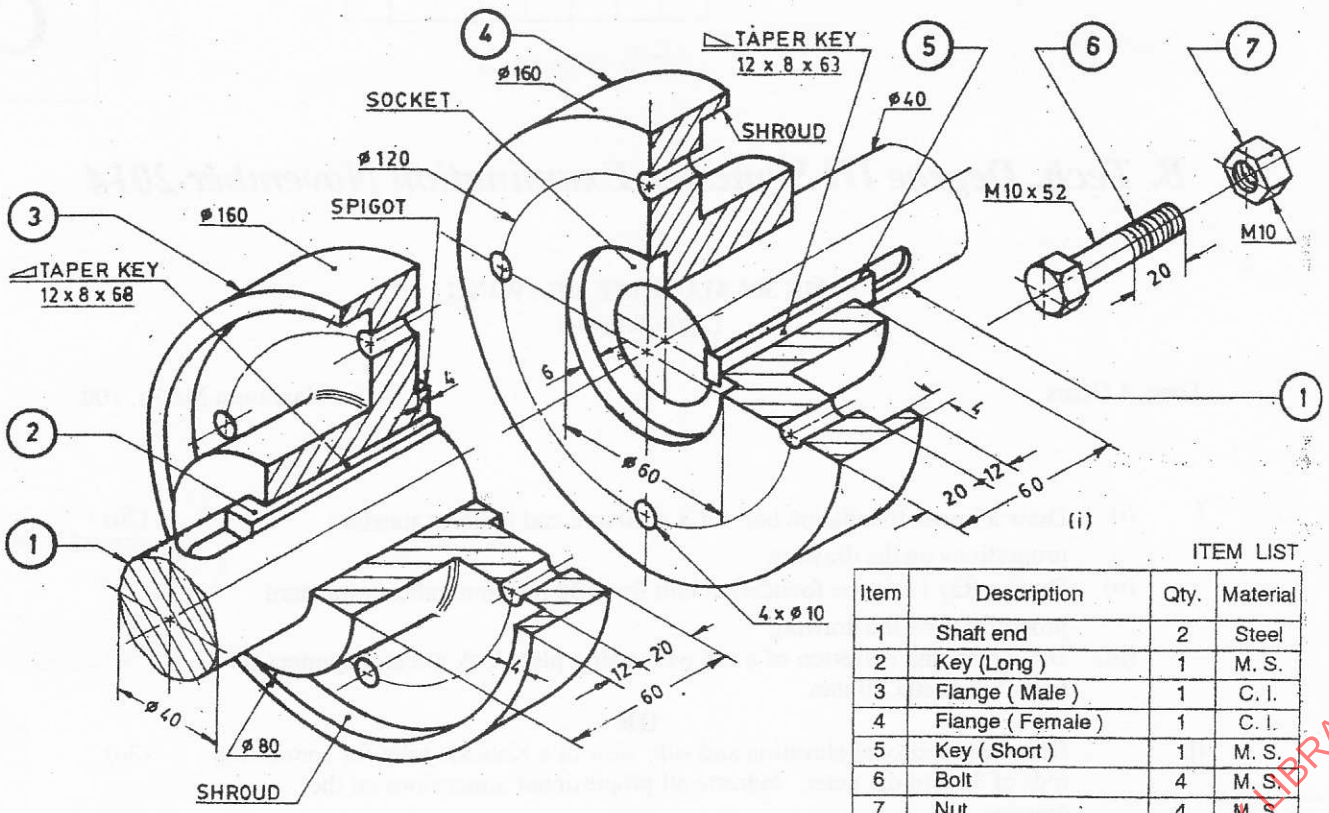

Fig 1

ITEM LIST

Item	Description	Qty.	Material
1	Shaft end	2	Steel
2	Key (Long)	1	M. S.
3	Flange (Male)	1	C. I.
4	Flange (Female)	1	C. I.
5	Key (Short)	1	M. S.
6	Bolt	4	M. S.
7	Nut	4	M. S.

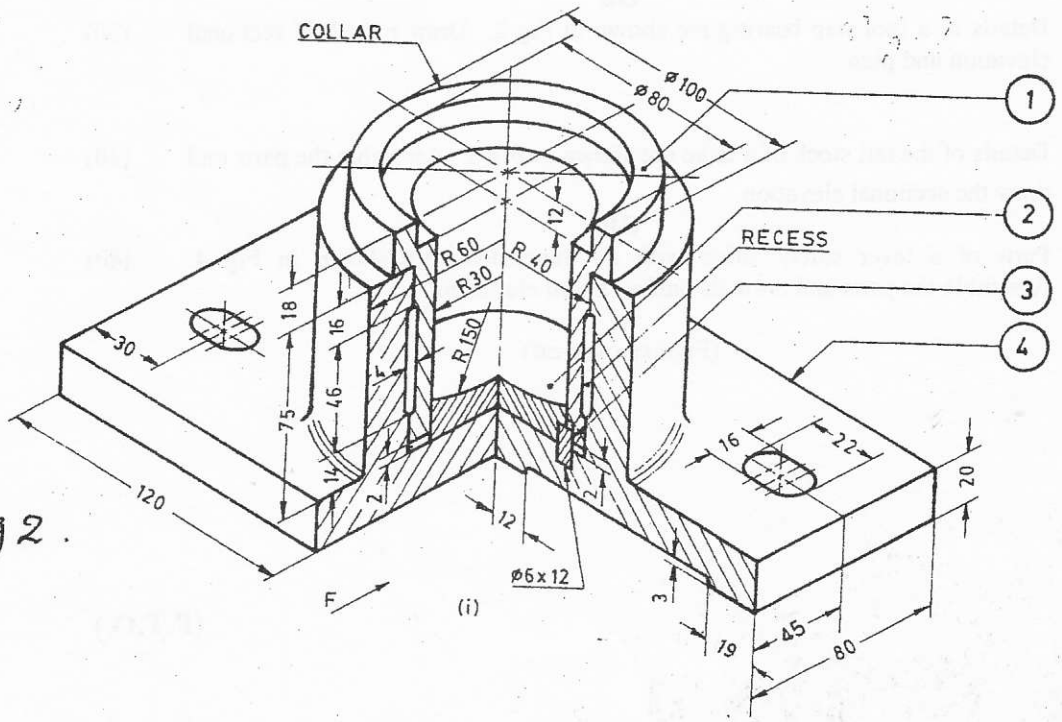

Fig 2.

MACHINE DRAWING

(Contd....3)

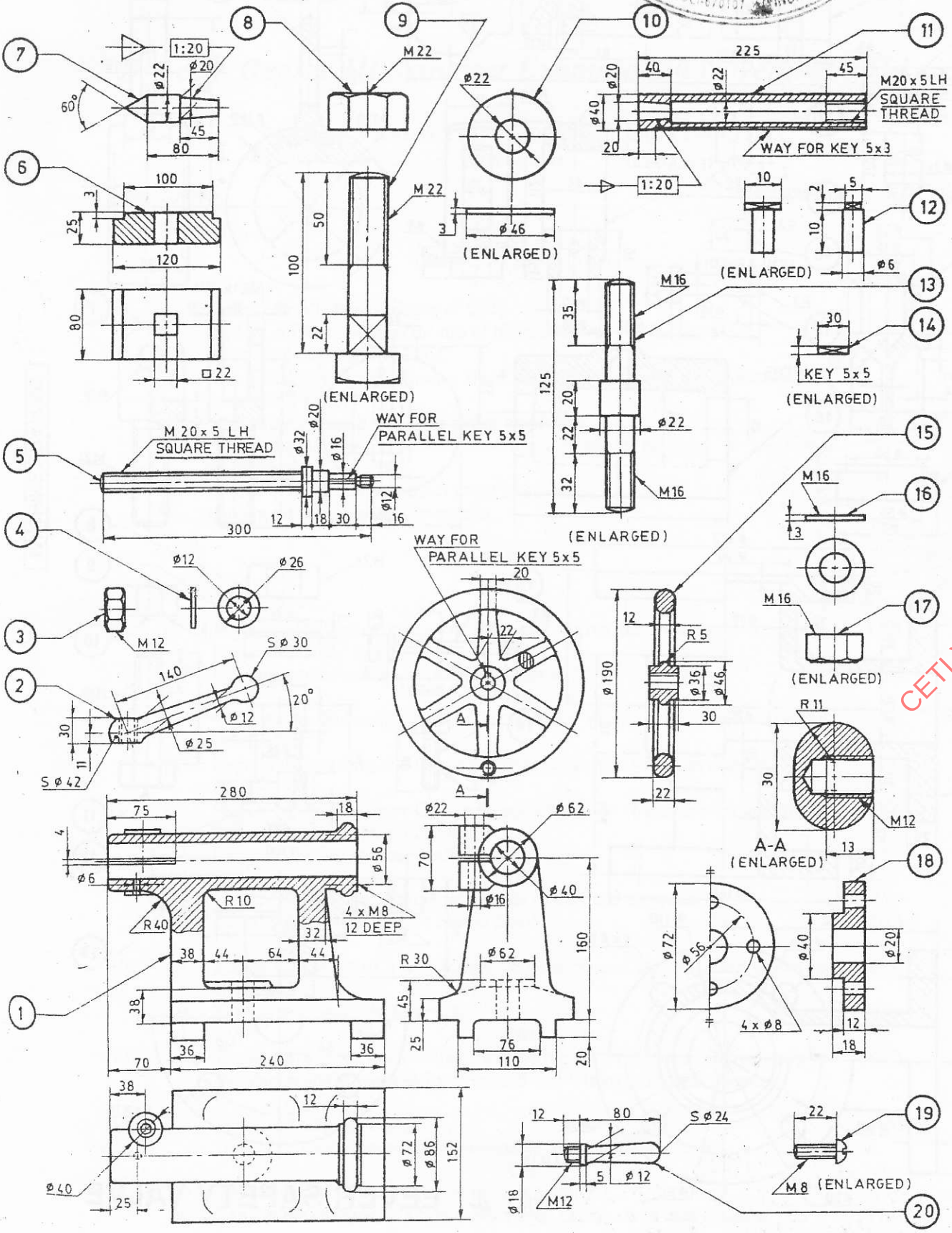

Fig 3. **LATHE TAIL STOCK**

(Contd....4)

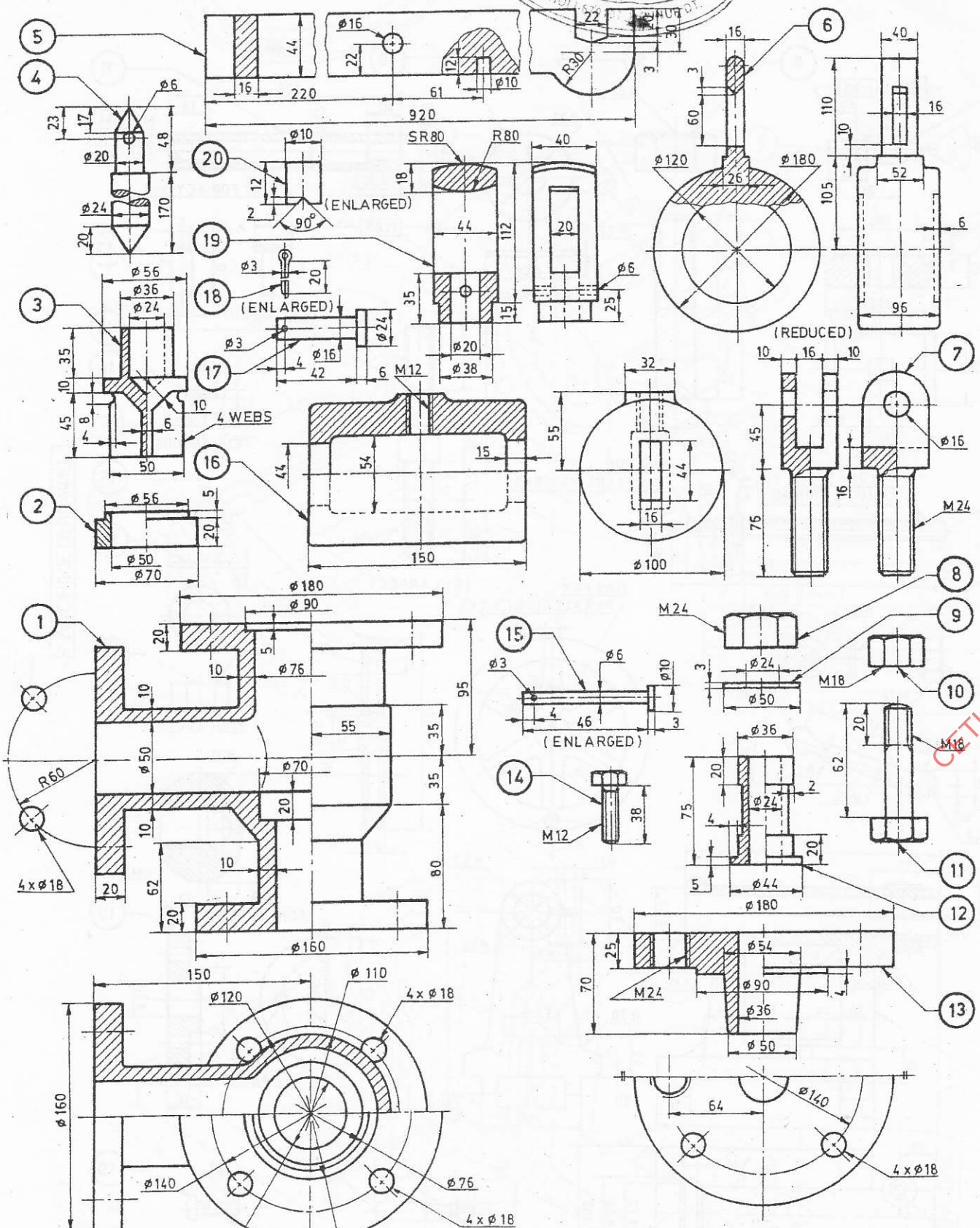

Fig. 4 **LEVER SAFETY VALVE**

***