B.Tech Degree VI Semester Examination April 2012

ME 601 INSTRUMENTATION AND CONTROL SYSTEMS

(2006 Scheme)

Time: 3 Hours Maximum Marks: 100

PART A

(Answer ***ALL*** questions)

$(8 \times 5 = 40)$

I. (a) Explain the terms state sensitivity and linearity of an instrument.

(b) What is the impulse response o a first order instrument? Explain.

(c) Explain the working of any one pyrometer.

(d) Explain the working of a Gieger Muller counter.

(e) Find the overall transfer function of the multiple loop feedback control system by block diagram reduction.

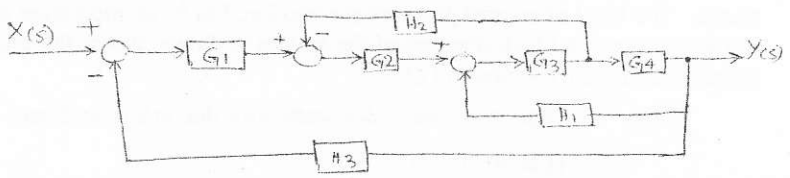

(f) Find the system equation of the mechanical system shown. Also find the force-voltage analogy.

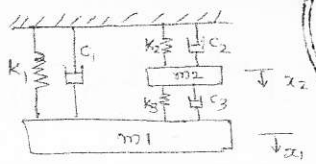

(g) The characteristic equation of a system is given as $s^4 + 21s^3 + 36s + 20 = 0$. Find whether the system is stable or not.

(h) Explain the working of a stepper motor.

PART B

$(4 \times 15 = 60)$

II. What are the various methods of connection for interfacing and modifying inputs to an instrument?

OR

III. The discharge coefficient C_d of an orifice can be found by collecting water that flows through during a time interval when it is under constant head $C_d = \dfrac{W}{t_\rho A\sqrt{2gh}}$. Find C_d and its possible error if $W = 385 \pm 0.2$ Kg. $A = \frac{\pi}{4}d^2$, $d = 0.013 \pm 0.000025$m, $t = 600 \pm 2$s, $g = 9.18 \pm 0.1\%$ m/s^2, $\rho = 1000 \pm 1\%$ Kg/m^3, $h = 3.6 \pm 0.003$m.

IV. Explain the working of a strain rosette. How temperature compensation is done to strain Gauges?

OR

(P.T.O.)

V. Explain the working of the following with neat sketches.

(i) ORSAT's apparatus
(ii) Hydraulic dynamometer

VI. (a) Consider a system represented by the differential equation $\frac{d^2y}{dt^2}+4\frac{dy}{dt}+3y=2r(t)$, where the initial conditions are $y(0)=1$, $\frac{dy}{dt}(0)=0$ and $r(t)=1$, $t\geq 0$. What is the response of the system $y(t)$? Determine the steady state response.

(b) A laser jet printer uses a laser beam to print copy rapidly. The laser is positioned by a control input $r(t)$ so that we have $Y(s)=\frac{5(s+100)}{s^2+60s+500}\cdot R(s)$. The input $r(t)$ represents the desired position of the laser beam.

(i) If $r(t)$ is a unit step input, find the output $y(t)$.

(ii) What is the final value of $y(t)$?

OR

VII. A system that controls the mean arterial pressure during anesthesia has been designed and tested. The level of arterial pressure is considered to be an indication of depth of anesthesia during surgery. A block diagram of the system is shown, where the impact of surgery is represented by the distribution $D(s)$.

(i) Determine the steady state error due to a disturbance $D(s)=1/s$ (Let $R(s)=0$)

(ii) Determine the steady state error for a ramp input $r(t)=t,\ t>0$ (Let $D(s)=0$).

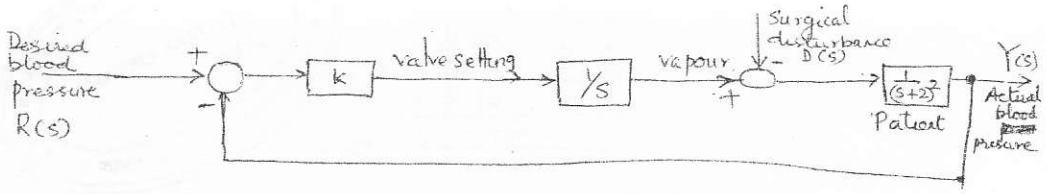

VIII. The figure shows a manipulator control system used in a welding robot. Determine the amplifier gain k so that the steady state error for a ramp input $r(t)=At$ (where $A=1$ mm/s) is less than or equal to 0.1mm, while a stable response is maintained. Plot the root locus.

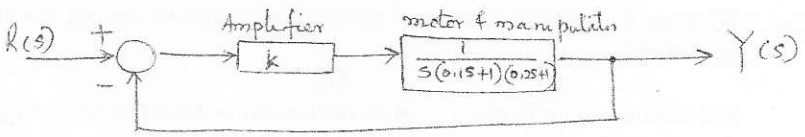

OR

IX. A robot arm has a joint control open-loop transfer function $G(s)=\frac{2572}{(s+45.3)(s+341)}$. Plot the frequency response. (Magnitude and phase).

***

BTS(C) – VI – 04.12 –011 - N

B. Tech Degree VI Semester Examination April 2012

IT 601 FINANCIAL MANAGEMENT AND E-BANKING

(2006 Scheme)

Time : 3 Hours Maximum Marks : 100

PART A

(Answer ***ALL*** questions)

(8 x 5 = 40)

I. (a) Enumerate any five users of accounting information, pointing out their information needs.

(b) Narrate the role of computers in the field of accounting in modern days.

(c) Explain briefly the following concepts:
(i) Fixed Cost (ii) Variable Cost (iii) Contribution
(iv) Break Even Point (v) Standard Costing

(d) Enumerate two Liquidity Ratios and two Solvency Ratios. How do we distinguish between the concepts of liquidity and solvency?

(e) "Statement of Changes in Working Capital is also called Funds Flow Statement". Comment.

(f) Briefly explain the steps involved in introducing a cost reduction programme.

(g) Enumerate various approaches to Home Banking implementation.

(h) Write a brief note on technology based financial services.

PART B

(4 x 15 = 60)

II. Explain the major accounting concepts. (15)

OR

III. From the following Trial Balance of M/s. XYZ & Company, prepare the Trading and Profit and Loss Account and Balance Sheet as on 31.03.2011. (15)

Trial Balance as on 31.03.2011

Particulars	Debit (₹)	Credit (₹)
Cash in hand	4,000	
Purchases	2,50,000	
Stock as on 1.4.2010	70,000	
Debtors	1,00,000	
Plant and machinery	1,20,000	
Furniture	30,000	
Bills receivable	40,000	
Rent and taxes	20,000	
Wages	30,000	
Salaries	36,000	
Capital		2,00,00
Bills payable		50,000
Creditors		50,000
Sales		4,00,000
	7,00,000	7,00,000

Adjustments:

(i) Closing inventory as on 31.03.2011 is ₹ 50,000/-

(ii) Outstanding wages is ₹ 6,000/-

(iii) Depreciation on plant machinery to be provided at 10% and furniture at 5%.

(P.T.O)

IV. Current sales of a single product company ABC Enterprises are 15,000 units. Selling price is ₹ 12/- per unit. Prime costs (viz.total of all direct costs) are ₹ 4/- per unit. Variable overheads are ₹ 2 per unit. Total fixed costs of the company are ₹ 60,000/-. Calculate the following: (i) P/V Ratio (ii) BEP (iii) Margin of Safety (iv) Sales to earn a profit of ₹ 24,000/- (v) Profit earned if sales is 30% above BEP. (15)

OR

V. (a) Explain the major limitations of financial ratio analysis. (6)

(b) Explain: (i) Profitability Ratios (ii) Activity Ratios (iii) Du-Pont Analysis. (9)

VI. From the following figures, prepare a Statement of Changes in Working Capital and Funds Flow Statement: (15)

(Amount in ₹)

Particulars (Liabilities)	**31.03.2010**	**31.03.2011**
Share Capital	1,00,000	1,20,000
Trade Creditors	25,000	50,000
Profit and Loss Account	4,75,000	5,00,000
	6,00,000	6,70,000
Particulars (Assets)	**31.03.2010**	**31.03.2011**
Cash	80,000	1,00,000
Debtors	2,40,000	2,30,000
Stock in Trade	1,60,000	1,70,000
Land	1,20,000	1,70,000
	6,00,000	6,70,000

OR

VII. Explain the difference between Cost Reduction and Cost Control. What are the prerequisites for an effective cost reduction programme? What is value analysis? (15)

VIII. Explain the various pricing and marketing issues in Online Banking. (15)

OR

IX. Write notes on ***any three*** of the following: (15)

(i) Banking via Online Service
(ii) Products *versus* Services
(iii) Management of financial supply chains
(iv) Open versus closed models
(v) Back-Office Support for online banking.

***

BTS(C) – VI – 04.12 – 011 - L

B. Tech Degree VI Semester Examination April 2012

EC 601 DIGITAL COMMUNICATION

(2006 Scheme)

Time : 3 Hours | Maximum Marks : 100

PART A

(Answer ***ALL*** questions)

(8 x 5 = 40)

I. (a) Explain the terms:
   (i) Random variable
   (ii) Random process

(b) What is an optimum filter? Explain.

(c) Explain the concept of Nonuniform quantization.

(d) Compare and contrast TDM and FDM.

(e) Explain anyone non-coherent binary modulation technique.

(f) Give the significance of eye pattern in digital communication and explain.

(g) Define the term channel capacity. Derive its expression for Gaussian channel with infinite bandwidth.

(h) Compare and contrast block codes and convolutional codes.

PART B

(4 x 15 = 60)

II. (a) Explain the Gram-Schmidt Orthogonalization procedure for geometric representation of signals. (10)

(b) Describe the concept of maximum likelihood estimation. (5)

OR

III. Explain the following: (15)
   (i) Correlation Receiver
   (ii) Matched Filter Receiver

IV. (a) State and explain sampling theorem for lowpass signals. Give its proof. (11)

(b) Explain about aperture distortion. (4)

OR

V. (a) With necessary sketches, explain Delta Modulation System. (8)

(b) Derive an expression for SNR of a PCM system. (7)

VI. (a) What is Inter Symbol Interference (ISI)? Suggest the solutions for minimizing ISI. (7)

(b) Explain Binary Frequency shift keying scheme, highlighting its generation and reception. (8)

OR

VII. (a) Explain the working of QPSK transmitter. (8)

(b) Discuss the principle of MSK system. (7)

(P.T.O.)

VIII. (a) Explain convolutional interleaving for burst error correction. Compare and contrast with block interleaving. (11)

(b) The generator polynomial of a (714) cyclic code in p^3+p+1. Obtain systematic and nonsystematic code vector for the data word (1110). (4)

OR

IX. (a) Sketch state diagram and trellis diagram for the convolutional encoder given. (8)

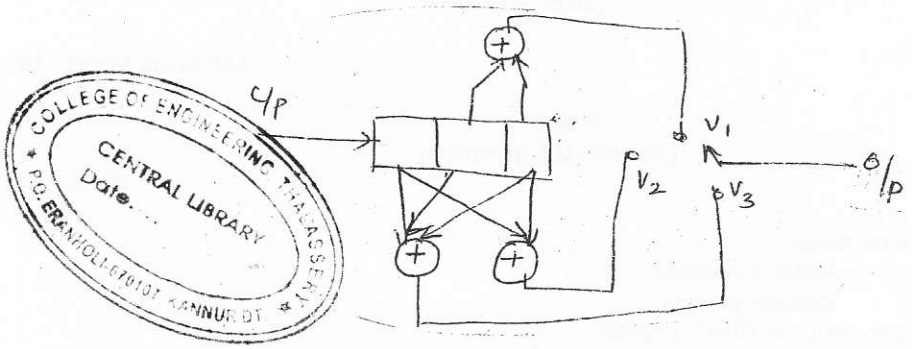

(b) For a (6, 3) systematic linear block code, the parity check bits are (7)

$$C_4 = d_1 \oplus d_3$$
$$C_5 = d_1 \oplus d_2 \oplus d_3$$
$$C_6 = d_1 \oplus d_2$$

Obtain generator matrix and parity check matrix.

***

BTS(C) – VI – 04.12 – 011 – Q

B. Tech Degree VI Semester Examination April 2012

EE 601 POWER SYSTEM I

(2006 Scheme)

Time : 3 Hours Maximum Marks : 100

PART A

(Answer *ALL* questions)

(8 x 5 = 40)

I. (a) What do you mean by Tariff? What are the objectives and requirements of a tariff?

(b) List the factors which should be considered while designing a power plant.

(c) A submarine cable is 4000 km long and has a conductor 5mm in diameter with gutta percha covering 5mm thick. Calculate the total capacitance of the cable, taking the relative permittivity of gutta-percha as 4.

(d) Write a short note on line supports.

(e) Explain briefly 3 phase, 4 wire system of distributing electrical power.

(f) Give the comparison between overhead and underground distribution system.

(g) In a three phase transmission line the conductors are placed at the corners of an equilateral triangle of each side 2.5m. If the radius of each conductor is 0.8cm, find the inductance per phase per km length of the line.

(h) Write a short note on bundled conductors.

PART B

(4 x 15 = 60)

II. (a) With neat diagram explain a hydroelectric powerplant. (10)

(b) Define: (i) connected load (ii) load factor (iii) demand factor (iv) diversity factor (5)

OR

III. (a) Mention the methods used to control reactive power. Discuss the role of load factor on the cost of electrical energy. (8)

(b) The output of a generating station is 500 x 10^6 KWh per year and average load factor is 0.7. If the annual fixed charges is ₹ 50/- per KW of installed plant and annual running charges are 5 per KWh, what is the cost per KWh of energy at the busbar? (7)

IV. (a) What is corona and what are the factors affecting corona? (8)

(b) An insulator string has three units each having a safe working voltage of 15 KV. The ratio of unit self capacitance to stray capacitance of earth is 10:1. Calculate: (i) The maximum safe working voltage (ii) The string efficiency (7)

OR

V. (a) What do you mean by sag? What are the factors affecting sag? Derive an expression for sag when the supports are at equal levels. (8)

(b) A transmission line has a span of 250m. Find the weight of the conductor per metre length if the sag, ultimate tensile strength and factor of safety are 1.5meters, 5758 Kg. and 2 respectively. (7)

(P.T.O)

VI. (a) Explain a typical distribution system. Write a short note on ring distributor. (8)

(b) Find the cross sectional area of the distributor shown. The distances are given in meters. (7)
Take $\rho = 1.78 \times 10^{-8} \Omega - m$. The maximum drop is not to exceed 10V.
The conductor is fed from the point A.

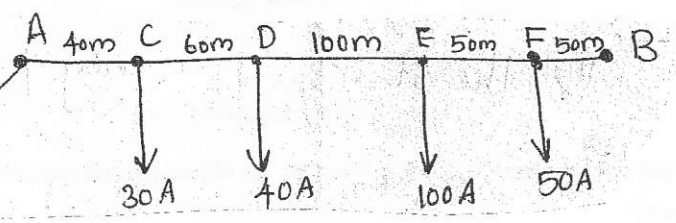

OR

VII. (a) State and explain Kelvin's law. Give the limitations of Kelvins law. (8)

(b) The following data relate to a 2 wire feeder. Current carried through out the year = 220A. (7)
The portion of capital cost which is proportional to X sectional area equal to ₹ 6/- per Kg of copper conductor. Cost of energy 6 paise per Kwh. Interest and depreciation charge is 10% per annum.
Density of copper is 8.93 g/cm^3. Specific resistance of copper is 1.8 $\mu\Omega cm$.
Find the most economical X section of the conductor in cm^2.

VIII. (a) What is ferranti effect? Explain it with the help of phasor diagram. (7)

(b) An overhead 3 phase transmission line delivers 4000 KW at 11 KV at 0.8 power factor lagging. The resistance and reactance of earth conductor are 1.5 Ω and 4 Ω per phase respectively. Determine: (8)

(i) Sending end voltage
(ii) Percentage regulation
(iii) Transmission efficiency

OR

IX. What do you mean by long transmission lines? Give A,B,C,D constants of long transmission lines by Rigorous method. (15)

***

BTS(C) – VI – 04.12 – 011 – J

B. Tech Degree VI Semester Examination April 2012

CS 601 COMPILER CONSTRUCTION

(2006 Scheme)

Time : 3 Hours | Maximum Marks : 100

PART A

(Answer ***ALL*** questions)

(8 x 5 = 40)

I. (a) Define tokens, patterns and lexemes and give examples,
(b) What is the role of finite automata in compiler design?
(c) Distinguish between top down and bottom up parsing. Mention the names of one top down and bottom up passer.
(d) What is an operator grammar? Give example.
(e) Distinguish between synthesized and inherited attributes with examples.
(f) What is an activation record? Explain its role.
(g) Define basic block. Give an example.
(h) Explain any two code optimization techniques with example.

PART B

(4 x 15 = 60)

II. With a neat diagram, explain the different phases of a compiler. Mention the input and output of each phase. (15)

OR

III. (a) Explain input buffering. (10)
(b) What is the significance of lexical analysis phase in compiler design? (5)

IV. Compute the FIRST and FOLLOW of the grammar and construct the predictive parsing table. (15)

$E \rightarrow TE'$

$E' \rightarrow +TE' / E$

$T \rightarrow FT'$

$T' \rightarrow *FT' / E$

$F \rightarrow (E) / id$

OR

V. (a) Define closure and goto operation of LR parser. (5)
(b) Explain LR parsing algorithm. (10)

VI. (a) What are the different parameter parsing techniques? (8)
(b) What are the data structures used for the implementation of a symbol table? Explain (7)

OR

VII. With an example explain the bottom up evaluation of S-attributed definition. (15)

VIII. (a) What are the different types of three-address statements? (8)
(b) What are the various methods to implement three address statements? (7)

OR

IX. What are the issues in the design of a code generator? Explain. (15)

***

BTS (C) – VI – 04.12 – 012 – O

B.Tech Degree VI Semester Examination April 2012

ME 602 DYNAMICS OF MACHINERY

(2006 Scheme)

Time : 3 Hours Maximum Marks : 100

PART A

(Answer ***ALL*** questions)

(8 x 5 = 40)

I. (a) Explain the effect of Pin Joint Friction in the analysis of slider crank mechanism.

(b) Explain the concept of equivalent dynamical system.

(c) Derive an expression for gyroscopic couple on a spinning disc.

(d) What are the effects of friction and of adding a central weight to the sleeve of a watt governor?

(e) Explain the 'direct and reverse crank' method for determining unbalanced forces in radial engines.

(f) Explain the terms 'static balancing' and 'dynamic balancing'. State the necessary conditions to achieve them.

(g) It is stated that the speed at which a belt or rope should be run to transmit maximum power is that at which the maximum allowable tension is three times the centrifugal tension in the belt or rope at that speed. Prove the statement.

(h) What are the leading and trailing shoes of an internal expanding shoe brake?

PART B

(4 x 15 = 60)

II. Construct free body diagrams for each elements of the linkage and determine the magnitude and direction of the forces acting on each part. The dimensions of various links are as follows : AB = 5 cm, BC = AD = 30 cm, CD = 17 cm and $\angle BAD = 60^\circ$. Link AD is fixed. The frictional forces may be neglected. A torque of magnitude 3000 N cm is acting on link CD in the anticlockwise direction. What input torque must be applied to link AB for equilibrium? (15)

OR

III. (a) Explain the principle of super position. (3)

(b) Explain the terms shaking forces and shaking moments. (3)

(c) In a double acting vertical steam engine running at 360 rpm, cylinder diameter is 25 cm, stroke is 30 cm, diameter of piston rod is 3.75 cm and length of connecting rod is 60 cm. When the crank has moved 120° from TDC, the pressure of the steam at cover end is 35×10^4 N/m^2 and at the crank end is 3×10^4 N/m^2. If the mass of the reciprocating parts is 45 Kg, find: (i) piston effort (ii) turning moment on the crank shaft for the given crank position. (9)

IV. A multicylinder engine is to run at a speed of 600 rpm. On drawing the crank effort diagram to scale of 1 cm – 2500 Nm and 1 cm – 30°, the areas above and below the mean torque line in sq. cm are as follows : –1.6, –1.72, +1.68, –1.91, +1.97, –1.62. The speed is to be kept within 2% of the mean speed of the engine. Calculate the necessary moment of inertia of the flywheel. Determine the suitable dimensions of the rectangular flywheel rim if the breadth is twice its thickness. The density of CI is 7.25 gm/cm^3 and hoop stress is 600 N/cm^2. (15)

OR

V. (a) In a spring controlled governor, the curve of controlling force is a straight line. When balls are 400 mm apart, the controlling force is 1200 N and when 200 mm apart, the controlling force is 450 N. At what speed will the governor run when the balls are 250 mm apart? What initial tension on the spring would be required for isochronism and what would then be the speed? The mass of each ball is 9 Kg. (7)

(P.T.O.)

(b) The turbine rotor of a ship weighing 35 kN has a radius of gyration of 45 cm. If rotates at a uniform speed of 3000 rpm clockwise when viewed from the stern, determine the gyroscopic couple and its effects upon the ship under the following conditions :

(i) when the ship is taking a curve of radius 100 m to the left at a crusing speed of 35 Km/hr.

(ii) when the ship is pitching in SHM the bow falling with its maximum velocity. The period of pitching is 40 seconds and the total angular displacement between the two extreme positions of pitching is 12°. (8)

VI. (a) Derive expressions for the maximum variation in tractive effort and also for swaying couple in an uncoupled locomotive. (5)

(b) A 4 cylinder in line marine oil engine has cranks at angular displacement of 90°. The outer cranks are 3.5 m apart and inner cranks are 1.5 m apart. The inner cranks are placed symmetrically between the outer cranks. The length of each crank is 500 mm. If the engine runs at 120 rpm and the mass of reciprocating parts of each cylinder is 8 kN, find the firing order of the cylinders for the best primary balancing forces of reciprocating masses. Determine the maximum unbalanced 1° couple for the best arrangement. (10)

OR

VII. (a) Explain the methods for balancing of V engines. (5)

(b) A 90° twin cylinder V engine has a stroke of 12.5 cm. The connecting rods are equal in length and measure 24.5 cm. The crank pin and crank webs are equivalent to 10 N at crank radius and each piston weighs 8 N. The weight of each connecting rod is 15 N and the CG of each connecting rod is 4.5 cm from the crank pin centre.

Show that the effect of the revolving mass and the 1° effect of the reciprocating masses may be balanced by a revolving weight. Find its magnitude and position if the distance of the CG of the balance weight from the crank shaft centre line is 4.5 cm. What is the nature and magnitude of the resultant secondary forces, when the crank makes 1,600 rpm? (10)

VIII. (a) A vehicle is moving on a level road at a speed of 36 Km/h. Its CG lies at a distance of 0.6 m from the ground level. The wheel base is 2.4 m and the distance of CG from the rear wheels is 0.9 m. Find the distance travelled by the vehicle before coming to rest when brakes are applied, (i) to the rear wheels (ii) to the front wheels (iii) to all the four wheels. The coefficient of friction between the tyres and the road surface is 0.45. (8)

(b) A cone clutch with cone angle 20° is to transmit 7.5 KW at 750 rpm. The normal intensity of pressure between the contact faces is not to exceed 0.12 N/mm^2. The coefficient of friction is 0.2. If the face width is 1/5th of mean diameter, find : (i) the main dimensions of the clutch (ii) axial force required while running. (7)

OR

IX. (a) A rope drive transmits 75 KW through a 1.5 m diameter, 45° grooved pulley rotating at 200 rpm. The coefficient of friction between the ropes and the pulley grooves is 0.3 and the angle of lap is 160°. Each rope has a mass of 0.6 Kg/m and can safely take a pull of 800 N. Taking centrifugal tension into account determine : (i) the number of ropes required for the drive (ii) initial rope tension. (8)

(b) Two shafts whose centres are 1 m apart are connected by V – belt drive. The driving pulley is supplied with 100 KW and has an effective diameter of 300 mm. It runs at 1000 rpm while the driven pulley runs at 375 rpm. The angle of the groove on the pulley is 40°. The permissible tension is 400 mm^2. Cross sectional area belt is 2.1 MPa. The density of belt is 1100 Kg/m^3. The coefficient of friction between belt and pulley is 0.28. Estimate the number of belts required. (7)

***

BTS (C) – VI – 04.12 – 012 – N

B.Tech Degree VI Semester Examination April 2012

IT 602 INTERNET PROGRAMMING

(2006 Scheme)

Time: 3 Hours

Maximum Marks: 100

PART A

(Answer ***ALL*** questions)

$(8 \times 5 = 40)$

I. (a) What are the rules for writing well formed XML documents?
(b) How do we declare an element in a DTD?
(c) Write short note on print function in PERL.
(d) Explain about scalar variables in PERL.
(e) What are the life cycle methods of JAVA Applet?
(f) Write short notes on comments used in JSP.
(g) List the control flow constructs used in PHP.
(h) Mention the types of scalar variables used in PHP.

PART B

$(4 \times 15 = 60)$

II. Create a well formed and valid XML document that contains elements you would find in a business letter, include elements such as company name, logo, company address, subject and body. Nest the recipient's name and address within another element named < to>.

OR

III. What is meant by DTD? What are the different types of DTD? Explain each with suitable example.

IV. Create the following form and save as page 1.

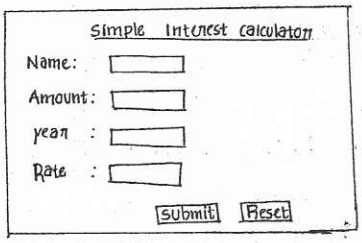

Calculate simple interest and display name and simple interest in page 2.

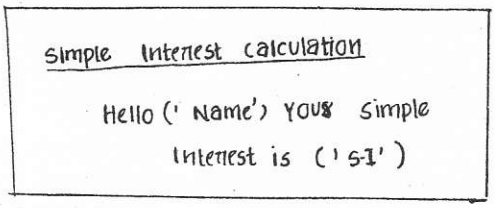

Use CGI Script.

OR

(P.T.O.)

V. How will you send one item and multiple items of data using links in CGI?

VI. Explain event driven programming using Java Applets.

OR

VII. Explain about different JSP elements.

VIII. Create following pages using PHP.

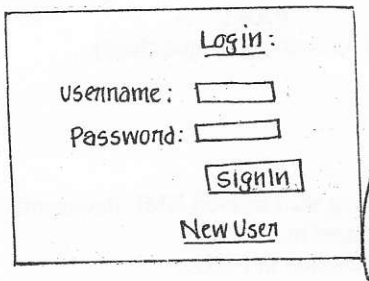

After successful signing in display the page.

Welcome (" UserName')

If new user create a registration form including name address, username, password etc and save the details into the Database.

OR

IX. Select name, address, username, password etc from a database corresponding to all entries and display it in a table. When click on name, you have to edit the details. After changing the values save it in the database.

***

BTS(C) – VI – 04.12 – 012 - L

B. Tech Degree VI Semester Examination April 2012

EC 602 MICROWAVE TECHNIQUES AND DEVICES

(2006 Scheme)

Time : 3 Hours | Maximum Marks : 100

PART A

(Answer ***ALL*** questions)

(8 x 5 = 40)

I. (a) What do you mean by cut-off frequency? What is its significance?

(b) Define phase velocity and group velocity.

(c) What is a Magic Tee? Explain its operation.

(d) What are S-Parameters? Explain their importance.

(e) Explain the applications of varactor diodes.

(f) What do you mean by Negative resistance? Explain its significance in microwave devices.

(g) Why the vaccum tubes fail at microwave frequency? Explain briefly the significance of Transit-time in microwave devices.

(h) Define VSWR. What is its value for 'open' and 'short' loads?

PART B

(4 x 15 = 60)

II. (a) Compare TE,TM and TEM waves. Explain why TEM mode of propagation does not exist in waveguides. (8)

(b) A rectangular waveguide has inner dimensions of 3 x 4.5cm with 10GHz signal propagating through it. Calculate cut-off wavelength and guided wavelength for dominant mode. (7)

OR

III. (a) Explain TE mode equations in rectangular waveguides in detail. (10)

(b) What do you mean by degenerate modes? (5)

IV. (a) Explain the concept of scattering matrix, considering an N-port junction. (10)

(b) Explain the properties of S-Matrix. (5)

OR

V. (a) Explain the operation of a directional coupler. Define coupling factor and directivity. (10)

(b) What is a Rat race? (5)

VI. Explain the operation of Tunnel diodes with the help of energy band diagrams and characteristics. (15)

OR

VII. What is GUNN effect? Explain the working of GUNN diodes with the help of Two - Valley theory. (15)

VIII. (a) Explain the operation of Reflex Klystron with the help of Applegate diagram. (10)

(b) What are the applications of Klystrons? (5)

OR

IX. (a) Explain the working of a TWT amplifier. (8)

(b) Explain the set-up for wavelength measurement in the lab. (7)

***

BTS (C) – VI – 04.12 – 012 – J

B.Tech Degree VI Semester Examination April 2012

CS/EE 602 DIGITAL SIGNAL PROCESSING

(2006 Scheme)

Time : 3 Hours | Maximum Marks : 100

PART A

(Answer *ALL* questions)

(8 x 5 = 40)

I. (a) Find the discrete equation $x[n]$ for the signal $x(t)$ given below, when it is sampled with a sample period of T = 0.003 seconds.

$x(t) = 2\cos(15t) + 2\cos(2079.4t)$

(b) Determine the $\mathcal{Z}$ - Transform of the following signal if it is digitized by an ADC with period T = 0.03 seconds

$x(t) = 3e^{-8t}\cos(25t)u(t)$

(c) Given the DFS of the sequence $\tilde{x}(n)$ as $\tilde{X}(K)$, what is the DFS of $\tilde{x}^*(n)$? Derive the result. (* represents complex conjugate).

(d) Given the sequence $x[n] = [1, 8, 7, 6]^T$ compute the FFT $X(K)$ using Radix-2 and Radix –4 algorithms. Compare the actual number of multiplications required for each.

(e) Show that an FIR filter with antisymmetric impulse response has constant group delay, but not constant phase delay.

(f) Implement $y(n) = x(n) + 2x(n-1) + 3x(n-2)$ in Direct Form and transposed Direct Form.

(g) Show that the variance of the quantization noise is $S^2/12$, where s is the quantization step size.

(h) With a neat tabular column, compare the features of fixed point and floating point DSP processors.

PART B

(4 x 15 = 60)

II. (a) Test whether the following systems are linear (5)

(i) $y(n) = \frac{1}{N}\sum_{m=0}^{N-1} x(n-m)$

(ii) $y(n) = \frac{1}{N}\sum_{m=0}^{N-1} x(n-m) + c$, c a constant.

(b) The difference equation of a simple filter is given by (10)

$y(n) = a\,y(n-1) + \frac{1}{3}x(n+1) + \frac{1}{3}x(n) + \frac{1}{3}x(n-1).$

Find (i) The system function

(ii) The impulse response

Is the above system realizable if 'n' represents a temporal variable? Is it realizable if 'n' is a spatial variable?

OR

III. (a) A system is defined by the following equation, (8)

$y(n) = \frac{1}{3}[x(n+1) + x(n) + x(n-1)]$

Find the system function, its poles and zeros.

Hence plot the pole-zero pattern of the system

(P.T.O)

(b) Determine the inverse $\mathcal{Z}$ - transform of (7)

$X(z) = \dfrac{z}{3z^2 - 4z + 1}$ if the R.O.C are

(i) $|z| > 1$ (ii) $|z| < \frac{1}{3}$ (iii) $\frac{1}{3} < |z| < 1$

IV. (a) Using DFT, compute the 4 point circular convolution of the sequences $x_1(n) = [1,3,2]^T$, $x_2(n) = [3,4,5,6,]^T$. (10)

(b) The DFT of a 10 point sequence is to be computed. Calculate the number of (5)

(i) complex multiplications (ii) complex additions
(iii) real multiplications (iv) real additions, required to compute the DFT

OR

V. Given an 8 point FFT processor, which can be used only once, compute the DFTs of the sequence. (15)

$x_1(n) = [1\ 8\ 6\ 7\ 4\ 2\ 3\ 1]$

$x_2(n) = [1\ 4\ 3\ 2\ 8\ 7\ 6\ 1]$

Draw the signal flow graph, mark outputs at each stage.

VI. (a) An FIR filter has the following pairs of complex conjugate zeros, (7)

$z_1, z_2 = 0.5e^{\pm j\frac{\pi}{6}}$

$z_3, z_4 = 2e^{\pm j\frac{\pi}{3}}$

Check whether this filter has got linear phase. State your reasons for the conclusion.

(b) A filter is given by the system function (8)

$H(z) = z + \frac{1}{3} + \frac{1}{4}z^{-1} + \frac{1}{4}z^{-2} + \frac{1}{3}z^{-3} + z^{-4}$.

Implement the filter with minimum number of multipliers. Will the filter have linear phase characteristics?

OR

VII. (a) A system is given by (10)

$$H(z) = \frac{\left(1 - z^{-1}\right)^2}{\left(1 - \frac{1}{2}z^{-1}\right)\left(1 - \frac{1}{8}z^{-1}\right)}$$

Implement the system in

(i) Direct Form – II
(ii) Transposed direct form =II
(iii) Cascade form, with subsections canonic
(iv) Parallel form, with subsections canonic

(b) What is the disadvantage of using Rectangular windowing for FIR filter design? (5)

VIII. (a) A system is given by $y(n) = 0.999\, y(n-1) + x(n)$ (8)

Calculate the quantization noise power at the output of the filter if the signal is quantized to (i) 8 bits (ii) 16 bits, both cases including the sign bit.

(b) Explain limit cycle oscillations. (7)

OR

IX. (a) With a neat tabular column, compare the architectural features of DSP processors and general purpose microprocessors. (8)

(b) With a neat block diagram, describe an image compression system. (7)

***

B.Tech Degree VI Semester Examination April 2012

ME 603 MACHINE DESIGN I

(2006 Scheme)

Time : 3 Hours | Maximum Marks : 100

PART A

(Answer ***ALL*** questions)

(8 x 5 = 40)

I. (a) Write short notes on:

(i) Interchangeability (ii) Preferred Numbers

(b) What is meant by stress concentration? With the help of suitable diagrams, explain any two methods of reducing stress concentration.

(c) What is bolts of uniform strength? Give examples of practical applications of such bolts.

(d) Distinguish between cotter joint and knuckle joint.

(e) Write short notes on: (i) Lozenge joint (ii) Caulking and fullering.

(f) What is nipping in a leaf spring? Discuss its role.

(g) What are the main advantages and disadvantages of welded joints?

(h) Under what circumstances are hollow shafts preferred over solid shafts? Give any two examples where hollow shafts are used.

PART B

(4 x 15 = 60)

II. (a) In an elastic material, principal stresses are tensile and compressive and the ratio being 4:1. Determine the limiting stress according to different theories of failure if tension test gives elastic limit of the material as 400N/mm^2. Assume Poisson's ratio as 0.3. (7)

(b) A flat plate subjected to a tensile force of 5kN as shown in figure. The plate material is grey cast iron FG 200 and the factor of safety is 2.5. Determine the thickness of plate. (8)

Ultimate stress for FG 200 = 200N/mm^2.

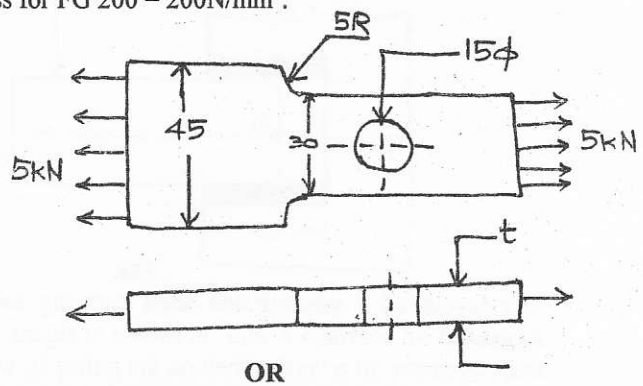

OR

III. A non-rotating shaft supporting a load of 2.5kN is shown in figure. The shaft is made of brittle material with an ultimate tensile strength of 300N/mm^2. The factor of safety is 3. Determine the dimensions of the shaft. (15)

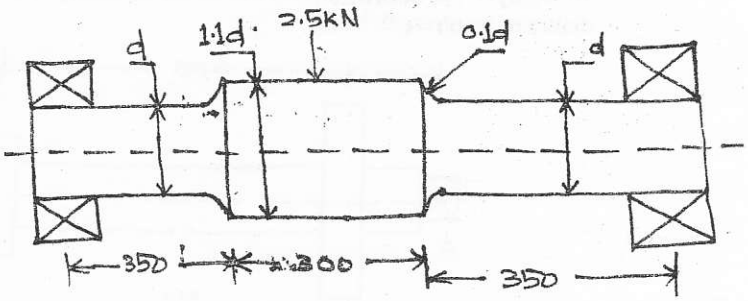

(P.T.O)

IV. A vertical two start square threaded screw of a 100mm mean diameter and 20mm pitch supports a vertical load of 18 kN. The axial thrust on the screw is taken by a collar bearing of 250mm outside diameter and 100mm inside diameter. Find the force required at the end of a lever which is 400mm long in order to lift and lower the load. The coefficient of friction for the vertical screw and nut is 0.15 and that for collar bearing is 0.20. (15)

OR

V. Design and draw a cotter joint to support a load varying from 30 kN in compression to 30kN in tension. The material used is carbon steel for which the following allowable stresses may be used. The load is applied statically. (15)
Tensile stress = Compressive stress = 50MPa;
Shear stress = 35 MPa and crushing stress = 90 MPa

VI. Design a double rivetted butt joint with two cover plates for the longitudinal seam of boiler shell 1.5m in diameter subjected to a steam pressure of 0.95 N/mm^2. Assume joint efficiency as 75%, allowable tensile stress in the plate 90MPa; compressive stress 140MPa and shear stress in the rivet 56 MPa. (15)

OR

VII. A semi-elliptic leaf spring used for automobile suspension consists of three extra full-length leaves and 15 graduated-length leaves, including the master leaf. The centre-to-centre distance between two eyes of the spring is 1m. The maximum force that can act on the spring is 75 kN. For each leaf, the ratio of width to thickness is 9:1. The modulus of elasticity of the leaf material is 207000 N/mm^2. The leaves are pre-stressed in such a way that when the force is maximum, the stresses induced in all leaves are same and equal to 450 N/MM^2. Determine: (15)

(i) the width and thickness of the leaves
(ii) the initial nip
(iii) the initial pre-load required to close the gap 'C' between extra full-length leaves and graduated length leaves.

VIII. A bracket carrying a load of 15kN is to be welded as shown in figure. Find the size of weld required if the allowable shear stress is not to exceed 80MPa. (15)

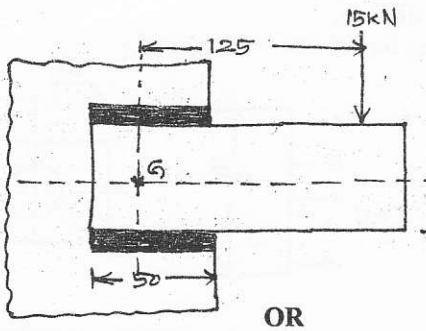

OR

IX. The layout of a transmission shaft carrying two pulleys B and C and supported on bearings A and is shown in figure. Power is supplied to the shaft by means of a vertical belt on the pulley B, which is then transmitted to the pulley C carrying a horizontal belt. The maximum tension in the belt on the pulley B is 2.5kN. The angle of wrap for both the pulleys is 180° and the coefficient of friction is 0.24. The shaft is made of plain carbon steel 30 C_8(Syt = 400N/mm^2) and the factor of safety is 3. Determine the shaft diameter on strength basis. (15)

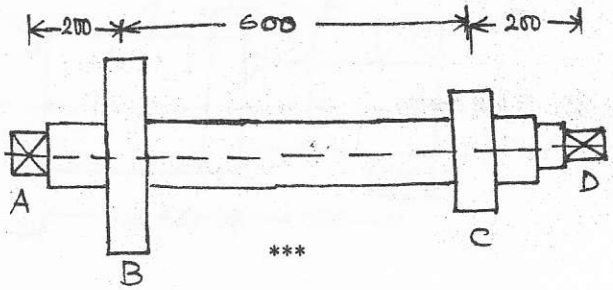

***

BTS (C) – VI – 04.12 – 013 – J

B.Tech Degree VI Semester Examination April 2012

CS/IT 603 OPERATING SYSTEMS

(2006 Scheme)

Time : 3 Hours | Maximum Marks : 100

PART A

(Answer ***ALL*** questions)

(8 x 5 = 40)

I. (a) Define operating system. List out any five services provided by operating system.

(b) Differentiate between preemptive and non preemptive scheduling.

(c) Describe the memory management with buddy systems.

(d) Define TLB. Explain the basic operations in TLB.

(e) Define file attribute. List any five file attributes.

(f) Describe disk cache with a figure.

(g) Define deadlock. Explain the conditions for deadlock.

(h) Describe resource allocation graph with an example.

PART B

(4 x 15 =60)

II. (a) Describe semaphore and its usage. (5)

(b) Define a process. Describe process state diagram and PCB. (10)

OR

III. List the five criteria for process scheduling and illustrate any three process scheduling algorithm with an example. (15)

IV. (a) Differentiate between paging and segmentation. (5)

(b) Define RAID. List and describe the RAID Levels. (10)

OR

V. (a) Describe the three methods for contiguous memory allocation. (5)

(b) Explain the need of page replacement algorithms and describe any three page replacement algorithm. (10)

VI. (a) Describe the need of device controllers. (5)

(b) Describe the operation of DMA with a diagram. (10)

OR

VII. (a) Explain any three directory structures schemes. (5)

(b) Describe the file access and control mechanisms. (10)

VIII. (a) Differentiate between dead lock and starvation. (5)

(b) Describe the methods for deadlock detection and recovery. (10)

OR

IX. Illustrate Banker's algorithm for several instance of resource type with an example. (15)

***

BTS(C) – VI – 04.12 – 013 - L

B. Tech Degree VI Semester Examination April 2012

EC/EI 603 VLSI DESIGN

(2006 Scheme)

Time : 3 Hours | Maximum Marks : 100

PART A

(Answer ***ALL*** questions)

(8 x 5 = 40)

I. (a) What are the advantages of GaAs technology over silicon MOS technology?

(b) Explain the major considerations in IC processing.

(c) Explain the transfer characteristics of NMOS inverter.

(d) Draw the mark layout of CMOS Inverter.

(e) Briefly explain Super Buffers.

(f) Explain the major considerations involved in using BICMOS drivers.

(g) Explain the terms skew and jitter.

(h) Write short notes on self timed circuit design.

PART B

(4 x 15 = 60)

II. (a) Explain GaAs technology in detail. (10)

(b) Explain the working of NMOS structure and draw its characteristics. (5)

OR

III. (a) Explain n well fabrication steps with diagram. (10)

(b) Derive the equations of drain to source current in non saturated regions of its operation. (5)

IV. (a) Draw the stick diagram of a two input: (8)

(i) CMOS NAND gate

(ii) NMOS NOR gate

(b) Draw the circuit diagram of CMOS inverter. Briefly explain the transfer characteristics of CMOS inverter. (7)

OR

V. (a) Write notes on: (8)

(i) Dynamic CMOS Logic

(ii) n-p CMOS Logic

(b) Determine the pull up to pull down ratio for an NMOS inverter driven by another NMOS inverter. (7)

VI. (a) Explain briefly about rise time and fall time estimation of CMOS Inverter. (7)

(b) Explain any two methods to drive large capacitive loads. (8)

OR

VII. (a) What is scaling in MOS Circuits? What are the three models of scaling? (5)

(b) Give the effects of scaling on the following parameters: (10)

(i) Parasitic capacitance

(ii) Gate delay

(iii) Maximum operating frequency

(iv) Current density

(v) Power dissipation per gate.

VIII. (a) Explain the timing classification in digital systems. (8)

(b) Explain the concept and implementation of synchronizers. (7)

OR

IX. (a) Explain the latched based clocking and its features. (8)

(b) Write short notes on self timed circuit design. (7)

***

BTS (C) – VI – 04.12 – 013 – P

B.Tech Degree VI Semester Examination April 2012

EE 603 CONTROL SYSTEMS I

(2006 Scheme)

Time : 3 Hours | Maximum Marks : 100

PART A

(Answer ***ALL*** questions)

(8 x 5 = 40)

I. (a) What is Gain margin and Phase margin? How stability can be predicted from gain margin and phase margin?

(b) Explain Nyquist stability criterion.

(c) What is Root locus? How stability can be analysed from root locus?

(d) What is synchro? Explain its working.

(e) What is PID controller? Explain its effects on the system performance.

(f) What is the effect of adding poles and zeros to the root locus of a system? How the system stability is affected?

(g) Explain the terms controllability and observability.

(h) Explain how pole placement is done using state feedback.

PART B

(4 x 15 =60)

II. (a) The forward path transfer function of a unity feedback system is G(s)=K/s(S+6). Find the resonant peak mr, resonant frequency ωr and the bandwidth of the closed loop system for K =100. (5)

(b) Draw the bode plot of the system whose open loop transfer function is given by (10)

$$G(s)H(s)=\frac{K}{s(1+s)(1+0.1s)(1+0.2s)}.$$

Determine the value of K for gain margin of 10 dB.

OR

III. (a) How gain margin and phase margin are evaluated from Nyquist stability criterion? (5)

(b) The open loop transfer function of a feedback control system is (10)

$$G(s)H(s)=\frac{K(1+2s)}{s(1+s)(1+s+s^2)}.$$ Sketch the Nyquist plot and hence find the range of K for stability using Nyquist criterion.

IV. (a) Explain the working of an ac servomotor. (5)

(b) Plot the root locus for a unity feedback closed loop system whose open loop transfer function is $G(s)=\frac{1}{s(s+4)(s^2+2s+2)}$. (10)

OR

V. (a) Explain the working of a stepper motor. (5)

(b) Sketch the root locus of the unity feedback system whose open loop transfer function is $G(s)=\frac{1}{s(s+2)(s+4)(s+5)}$. (10)

(P.T.O)

VI. Consider the system whose open loop transfer function is $G(s)=\dfrac{2.66}{s(s+1)(s+4)}$. (15)

Compensate the system so that it meets the following specifications: (i) Damping ratio $s=0.5$ (ii) settling time, $t_s=10\text{sec}$ (iii) velocity error constant $kv \geq 5\,\text{sec}^{-1}$. Use Root locus method.

OR

VII. Open loop transfer function of the uncompensated system is $G(s)=\dfrac{1}{s(s+1)(s+2)}$. (15)

Compensate the system by cascading suitable lag-lead compensator so that the compensated system has the static velocity error constant of 10 sec^{-1}, phase margin of 45° and gain margin of 10 dB or more.

VIII. (a) State and explain the necessary and sufficient condition for a system to be observable. (5)

(b) Consider the following system. (10)

$$\begin{bmatrix}\dot{x}_1\\ \dot{x}_2\\ \dot{x}_3\end{bmatrix}=\begin{bmatrix}-1 & 0 & 0\\ 1 & -2 & 0\\ 2 & 1 & -3\end{bmatrix}\begin{bmatrix}x_1\\ x_2\\ x_3\end{bmatrix}+\begin{bmatrix}10\\ 1\\ 0\end{bmatrix}u$$

$$y=\begin{bmatrix}1 & 0 & 0\end{bmatrix}\begin{bmatrix}x_1\\ x_2\\ x_3\end{bmatrix}.$$

Determine whether the system is completely controllable and observable.

OR

IX. (a) Explain reduced order observers. (5)

(b) A linear continuous system has the following state space matrices: (10)

$$A=\begin{bmatrix}-1 & C\\ 4 & -5\end{bmatrix};\ B=\begin{bmatrix}0\\ 2\end{bmatrix};\ C=\begin{bmatrix}1 & -1\end{bmatrix};\ D=\begin{bmatrix}0\end{bmatrix}$$

(i) find the value of C so that the system will be completely controllable.

(ii) compute the transfer function of the system.

***

BTS(C) – VI – 04.12 – 014 - P

B. Tech Degree VI Semester Examination April 2012

ME 604 HEAT AND MASS TRANSFER

(2006 Scheme)

Time : 3 Hours Maximum Marks : 100

PART A

(Answer *ALL* questions)

(8 x 5 = 40)

I. (a) Derive the general differential equation of heat conduction? How this differential equation is subject to the given constraints called initial and boundary conditions of the problem?

(b) What is called as Extended Surfaces? Why is the assumption of one-dimensional heat flow made in the analysis of Extended Surfaces?

(c) Define Grashof Number. Explain its significance in natural convection heat transfer.

(d) What is Reynold's Analogy? Describe the relation between the fluid friction and heat transfer.

(e) State and explain the Wein-Displacement law. Show that the $E_{b\lambda}$ will be maximum when $\lambda_{max}.T = 2900\mu k$.

(f) What is radiation shape factor and why are they used? State and explain reciprocity theorem.

(g) What is LMTD method of heat exchanger analysis? When is LMTD method most suitable for heat exchanger designer calculations?

(h) How are heat exchangers classified? Sketch the temperature variations in parallel flow and counter flow heat exchangers.

PART B

(4 x 15 = 60)

II. (a) In a cylindrical fuel rod of a nuclear reactor, the internal heat generation is given by the equation: (8)

$\dot{q} = \dot{q}_0\left[1-\left(\frac{r}{r_0}\right)^2\right]$. Calculate the temperature drop from the center line to the surface of a 2.5cm O.D rod having a thermal conductivity of 20w/mk, if the rate of heat removal from the surface is 2.5 MW/m^2.

(b) Calculate the heat loss per sq.m of outside surface area for a heated sphere 15cm in diameter covered with 5cm layer of insulation (K = 0.0663W/mK). The inside and outside surface temperatures of the insulation are 315°C and 80°C respectively. (7)

OR

III. (a) A straight rectangular fin has a length of 35mm, thickness of 1.4mm. The thermal conductivity is 55 w/mk. The fin is exposed to a convection environment at 20°C and h = 500 w/m^{2}k. Calculate the heat loss for a base temperature of 150°C. (8)

(b) A copper wire of 40mm diameter carries 250A and has a resistance of 0.25 x 10^{-4} Ωcm/length. Surface temperature of copper wire is 250°C and the ambient air temperature is 10°C. If the thermal conductivity of the copper wire is 175 w/mk, calculate: (7)

(i) Heat transfer coefficient

(ii) Maximum Temperature

(P.T.O)

IV. A wall 4m high by 5m wide is at 60°C and the surrounding air is at 20°C. Calculate the heat lost by natural convection neglecting end effects using the relation (15)

$$N_{Nu} = 0.51(N_{pr})^{1/2}\left(N_{pr}+1\right)^{1/4}\left(N_{Gr}\right)^{1/4}$$

Take $e = 1.09 kg/m^3$, $\mu = 1.91\times10^{-5} NS/m$

$K = 0.063 KJ/mb_r K, N_{pr} = 0.714.$

OR

V. Using Buckingham's Π theorem, explain the dimensional analysis applied to Forced Convection and derive an expression $N_u = \phi(\mathrm{Re}, P_r)$. (15)

VI. The outlet header of high pressure steam super heater consists of a pipe (E = 0.8) of diameter 27.5cm. Its surface temperature is 500°C. Calculate the loss of heat per unit length by radiation if it is placed in an enclosure at 30°C. (15)

If the header is now enveloped in a steel screen of diameter 32.5 cm and emissivity 0.7 and the temperature of the screen is 240°C, find the reduction in heat loss by radiation due to provision of this screen.

OR

VII. (a) What are called as Radiation Shields? (5)

(b) Two perfectly black parallel planes of 1.2m x 1.2m are separated by a distance of 1.2m. One plane is maintained at 800K and the other at 500K. The planes are located in a large room whose walls are at 300K. What is the net heat transfer between them? (10)

VIII. Water enters a counter flow, double pipe heat exchanger at 10°C, flowing at the rate of 1300kg/hr. It is heated by oil (Cp = 2000J/kgK) flowing at the rate of 550kg/hr from an inlet temperature of 94°C. For an area of $1m^2$ and an overall heat transfer coefficient of $1075 w/m^2K$, determine the total heat transfer and the outlet temperatures of water and oil. (15)

OR

IX. A counter flow double pipe heat exchanger using super heated steam is used to heat water at the rate of 10500kg/hr. The steam enters.the heat exchanger at 180°C and leaves at 130°C. The inlet and exit temperature of water are 30°C and 80°C respectively. If the overall heat transfer coefficient from steam to water is $814 W/m^2K$, calculate the heat transfer area. What would be the increase in area if the fluid flows were parallel? (15)

***

BTS (C) – VI – 04.12 – 014 – L

B.Tech Degree VI Semester Examination April 2012

CS/IT 604 ANALYSIS AND DESIGN OF ALGORITHMS

(2006 Scheme)

Time : 3 Hours | Maximum Marks : 100

PART A

(Answer *ALL* questions)

(8 x 5 = 40)

I. (a) Explain the significance of notations "O" and "Ω" in the complexity analysis of algorithms.

(b) How do we analyse algorithms based on (i) amount of space used and (ii) optimality?

(c) Explain the heap sort procedure.

(d) Define a Red – Black Tree.

(e) Discuss any one method used to represent graphs.

(f) Explain the dynamic programming technique used in algorithm design.

(g) Differentiate between NP complete and NP hard problems.

(h) Write notes on approximation algorithms.

PART B

(4 x 15 = 60)

II. What do we understand by complexity of an algorithm? Explain worst case complexity and average case complexity with a suitable example. (15)

OR

III. Explain the significance of recurrence equation. Solve the recurrence equation $T(n) = 16T\left(\frac{n}{4}\right) + n$. (15)

IV. Write an algorithm for insertion sorting method. Analyze its complexity. (15)

OR

V. Explain binary search algorithm as an example of divide and conquer strategy and find its average case complexity. (15)

VI. Write an algorithm to find the bicomponents of an undirected graph. (15)

OR

VII. Explain Warshall's algorithm for finding transitive closure of a binary relation. (15)

VIII. (a) What do you know by optimization problem? Give an example. (5)

(b) Explain the first fit decreasing strategy for bin packing problem (10)

OR

IX. (a) Explain the sequential coloring algorithm for graph coloring problem. (5)

(b) Discuss various strategies applied for TSP problem. (10)

***

BTS (C) – VI – 04.12 – 014 – N

B.Tech Degree VI Semester Examination April 2012

EC 604 ELECTRONIC MEASUREMENTS AND INSTRUMENTATION

(2006 Scheme)

Time : 3 Hours | Maximum Marks : 100

PART A

(Answer ***ALL*** questions)

(8 x 5 = 40)

I. (a) Differentiate between direct and indirect methods of measurements.

(b) Review the loading effect.

(c) Categorise transducers based on the type of input.

(d) Give the principle behind Piezo electric transducer.

(e) Draw the block diagram of a function generator.

(f) Explain sweep frequency generator.

(g) Write the principle of thermocouple.

(h) How does a telemetry system work?

PART B

(4 x 15 = 60)

II. (a) Define the terms: accuracy, linearity, threshold, resolution and range. (10)

(b) Derive the transfer function of a first order system. (5)

OR

III. (a) With the help of a block diagram illustrate the functional elements of a general instrumentation system. (8)

(b) What are the different types of instrumental errors? Suggest three steps used to minimize these errors. (7)

IV. (a) What is LVDT? Explain with the help of a diagram. How is it used to measure linear displacement? (8)

(b) Suggest a method used to measure low value resistors. (7)

OR

V. (a) Show the method of measuring unknown inductance using Maxwell Bridge. (8)

(b) List the various sources of errors in Bridge circuits and suggest the precautions. (7)

VI. (a) Draw the block diagram of digital storage oscilloscope and explain. (8)

(b) Describe the working of strip chart recorders. (7)

OR

VII. (a) What is spectrum analyzer? How is it different from wave analyzer? Draw the block diagram of spectrum analyzer and explain. (10)

(b) Draw the block diagram of CRO. (5)

VIII. (a) What is the principle of headflow meters? Explain the flow measurement using venturi tube. (8)

(b) Explain low pressure measurement using ionization Guage. (7)

OR

IX. Draw the block diagram of a multichannel Data Acquisition system and explain the functions of each block. (15)

***

BTS (C) – VI – 04.12 – 014 – S

B.Tech Degree VI Semester Examination April 2012

EE 604 ELECTRICAL DRAWING

(2006 Scheme)

Time: 3 Hours Maximum Marks: 100

I. Draw the half sectional end view of a dc machine with the following dimensions.

Diameter of the shaft	= 5cm
Outside diameter of the armature	= 36cm
Axial length of the armature	= 25cm
Armature winding overhang on each side	= 7.5cm
Diameter of commutator	= 23cm
Axial length of commutator	= 11.5cm
Number of poles	= 4
Pole height	= 16cm
Pole width	= 12cm
Pole arc	= 0.65
Number of interpoles	= 4
Interpole dimensions	= 4cm × 15cm
Thickness of yoke	= 3.5cm
Depth of slot	= 2.5cm

(25)

OR

II. Draw the developed simple two layer wave winding for a DC machine having 30 armature conductors and 4 poles. Mark their brush position. (25)

III. Draw the half sectional end view of 3ϕ, 415V, 5hp squirrel cage IM with the following dimensions.

Outside diameter of the stator stamping			= 230
Inside diameter of the stator stamping			= 164
Stator core length			= 120
Thickness of the stator frame			= 25
Slots	(i)	Open type	
	(ii)	Number = 36	
	(iii)	size 15 × 8	
Airgap			= 2
Outside diameter of rotor stamping			= 160
Inside diameter of rotor stamping			= 35
Shaft diameter at centre			= 35
Shaft diameter at bearing			= 30

The rotor has totally closed type slots and contains bare conductors which are short circuited at both ends. Other missing data may be assumed. All dimensions are in mm. (25)

OR

(P.T.O.)

IV. Draw the full sectional plan of a 3-phase transformer with following dimensions. (25)

L.V. winding

Inside diameter of L.V. winding	= 23.1cm
Winding in two layers, total radial thickness	= 1.53cm
Radial thickness of one layer	= 0.74cm
Number of turns per layer	= 13
Average height of one turn	= 3.05cm
Cross section of the L.V. conductor made from 6 straps placed in parallel, each of 3.2 × 9.5mm size	= 182 sq.mm
Thickness of L.V. insulating cylinder	= 0.3cm
Total height of L.V. winding	= 42.7cm

H.T. winding

Total number of coils

(i) Two coils of end ring turn, each 1.2cm, thick

(ii) 8 coils of 64 turns each

(iii) 2 coils of 35 turns, each.

Thickness of spacer = 6mm, made from the two U pieces, each 3mm thick.

Average end clearance = 3.3cm from the top and 2cm from the bottom of the yoke.

Total height of H.T. winding = 42.7 cm

Diameter of the conductor bare = 0.264 cm

V. Draw the developed winding diagram of a double layer lap winding for a three phase 6 pole 18 slots machine. Assume that the winding is full pitched. (25)

OR

VI. Draw the developed winding diagram for a 3 phase, 36 slot, 4 pole mush connected armature. (25)

VII. Draw the structural details of a three phase double circuit transmission tower of 110KV. (25)

OR

VIII. Draw the single line layout of typical generating station with two 110KV outgoing feeders and two 66KV outgoing feeders. (25)

***

BTS(C) – VI – 04.12 – 015 – K

B. Tech Degree VI Semester Examination April 2012

ME 605 TOOL ENGINEERING AND DESIGN

(2006 Scheme)

Time : 3 Hours Maximum Marks : 100

PART A

(Answer *ALL* questions)

(8 x 5 = 40)

I. (a) Sketch a single point cutting tool and mark its rake angles and clearance angles.
(b) Write notes on cutting tool materials and their properties.
(c) Explain the mechanism of orthogonal cutting.
(d) Write notes on cutting fluids and their selection.
(e) Explain method of tool life testing.
(f) Write notes on economics of machining.
(g) Differentiate between jigs and fixtures.
(h) Discuss the effect of excessive clearance between punch and die.

PART B

(4 x 15 = 60)

II. Sketch a broaching tool and describe the process of broaching in detail.

OR

III. Discuss the process of grinding wheel manufacturing and their selection.

IV. Describe the factors affecting cutting forces and power analysis.

OR

V. (a) Explain thermal aspects of machining.
(b) Write notes on chip formation and types of chips.

VI. Explain the effect of machining parameters on tool life.

OR

VII. What are the factors affecting machinability?

VIII. Describe different types of clamps with the help of sketches.

OR

IX. Write notes on:
(i) Press working and die block design
(ii) Milling fixtures

***

BTS(C) – VI – 04.12 – 015 – J

B. Tech Degree VI Semester Examination April 2012

IT 605 OBJECT ORIENTED MODELING AND DESIGN

(2006 Scheme)

Time : 3 Hours | Maximum Marks : 100

PART A

(Answer ***ALL*** questions)

(8 x 5 = 40)

I. (a) Give the structure of a Unified process.

(b) Define packages and discuss its visibility property with appropriate notations.

(c) Give the need for lifeline and focus of control in a sequence diagram.

(d) Define interaction.

(e) Define state, initial state and final state with appropriate notations.

(f) Write a short note on interface.

(g) Explain about OCL.

(h) What do you mean by a Software Architecture?

PART B

(4 x 15 = 60)

II. Describe the basic building blocks of UML.

OR

III. Explain Use Case Modeling with an example.

IV. Illustrate Activity diagram with an example.

OR

V. Explain about the Interaction diagrams. What are the features that distinguish each diagrams?

VI. Explain about refining analysis relationships.

OR

VII. Illustrate state machine diagram with an example.

VIII. Explain about deployment with an example.

OR

IX. Describe about architecture Description Languages.

***

B.Tech Degree VI Semester Examination April 2012

CS/EC/EB/EI 605 CONTROL SYSTEMS ENGINEERING

(2006 Scheme)

Time : 3 Hours Maximum Marks : 100

PART A

(Answer ***ALL*** questions)

(8 x 5 = 40)

I.

(a) Find the inverse Laplace transform of $F(s) = \dfrac{S^2 + 2s + 3}{S^3 + 6s^2 + 12s + 8}$.

(b) Obtain the force current analogy.

(c) Derive expression for the impulse response of a 2nd order system.

(d) Briefly explain the effects of derivative and integral control.

(e) Define resonant peak, resonant frequency and bandwidth.

(f) State and explain Nyquist stability criterion.

(g) Explain the properties of root loci.

(h) Draw the circuit diagram of a phase –lag network and derive the transfer function.

PART B

(4 x 15 = 60)

II. Define transfer function. Find the transfer function of the electrical network shown in figure. (15)

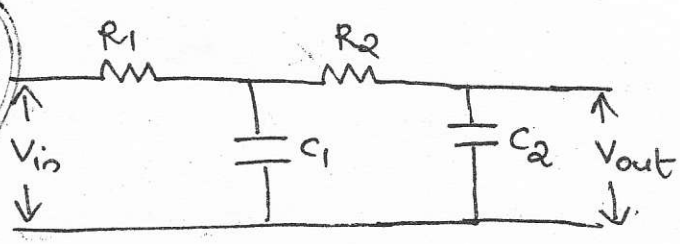

OR

III. State and explain Mason's gain formula. Find the transfer function of the signal flow graph shown in figure, using Mason's gain formula. (15)

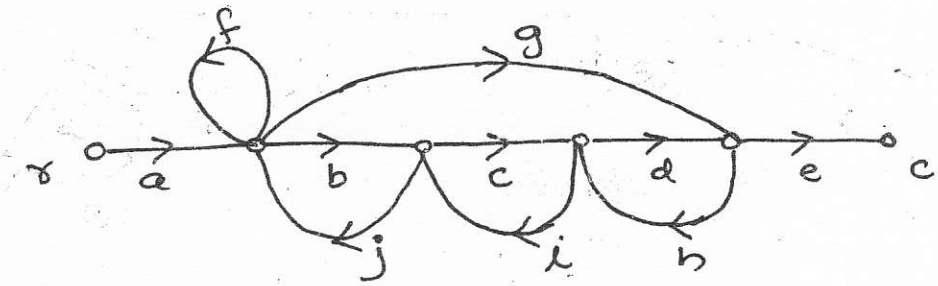

IV. Derive expression for the rise time, peak time and maximum peak overshoot of a 2nd order system subjected to unit step input. (15)

OR

(P.T.O)

V. (a) The overall transfer function of a unity feedback system is given by $\frac{C(s)}{R(s)} = \frac{10}{s^2+6s+10}$. Determine the generalized error constants, expression for error signal and steady state error for the input $r(t) = 1+t+t^2$. (9)

(b) Using Routh-Hurwitz criterion, find the range of 'K' to keep the system to be stable. The characteristic equation is $s^4 + 25s^3 + 15s^2 + 20s + K = 0$. (6)

VI. Draw the bode plot of the unity feedback system whose open loop transfer function is given by $G(s) = \frac{30}{s(1+0.5s)(1+0.08s)}$. Find the gain margin, phase margin and check the stability of the system. (15)

OR

VII. The open loop transfer function of a unity feedback system is given by $G(s) = \frac{1}{s(1+s)(1+2s)}$. Sketch the polar plot and determine the gain margin and phase margin. (15)

VIII. Sketch the root locus for a unity feedback system with open loop transfer function as given by $G(s) = \frac{K}{s(s^2+4s+13)}$. (15)

OR

IX. The open loop transfer function of the uncompensated sytem is $G(s)\,H(s) = \frac{5}{s(s+2)}$. Design a suitable compensator for the system so that the static velocity error constant Kv=20, the phase margin is atleast 55° and the gain margin is atleast 12dB. (15)

***

BTS (C) – VI – 04.12 – 015 – M

B.Tech Degree VI Semester Examination April 2012

EE 605 MODERN COMMUNICATION ENGINEERING

(2006 Scheme)

Time : 3 Hours | Maximum Marks : 100

PART A

(Answer *ALL* questions)

(8 x 5 = 40)

I. (a) What are the factors that determine the reliability of microwave link?

(b) Compute the required antenna tower height of a line-of-sight microwave link operating at 2GHz with a path length of 50km and an atmospheric refraction factor of 1.34. Assume that physical obstacle height is 20m.

(c) A satellite is orbiting in the equatorial plane with a period from perigee to perigee of 12 hours. Given that the eccentricity is 0.002 and the Earth's equatorial radius is 6378.1414km. Calculate the semi-major axis.

(d) Distinguish between Multiplexing and Multiple accessing.

(e) Why cell size is hexagonal in GSM system?

(f) If 20 MHz of total spectrum is allocated for a duplex wireless cellular system and each simplex channel has 25kHz RF bandwidth, find:

(i) The total number of duplex channels

(ii) The total number of channels per cell site, if N=4 reuse is used.

(g) Explain the effects on ground on antennas.

(h) Explain about UHF Microwave antennas.

PART B

(4 x 15 = 60)

II. (a) Determine the transmitter power required in an LOS microwave link operating at FDM mode, with a path length of 60km and a carrier frequency of 24 Hz. The FM receiver's modulation index is 0.5, the modulation frequency is 5 MHz and the receiver noise figure is 5 dB. The transmitter and receiver antenna diameters are 1m (parabolic reflectors), and the feed losses and branch losses are 5 dB. (10)

(b) Describe multipath fading. (5)

OR

III. (a) With block schematic explain the working of microwave terminal transmitters. (8)

(b) A line-of sight microwave link operates at a frequency of 2.2 GHz and a system gain of 100dB, and must maintain a reliability factor of 99.99%. Compute the maximum hop length for the following parameters: (7)

(i) Antenna diameter for both receiver and transmitter D=2.5m.

(ii) Terrain roughness in average (A=1).

(iii) Atmospheric impact factor is B=0.25

(iv) Assume a fade margin of 35dB.

IV. (a) In a link budget calculation at 12 GHz, the free space loss is 206 dB, the antenna pointing loss is 1dB, and the atmospheric absorption is 2 dB. The receiver G/T ratio is 19.5dB/K and the receiver feeder losses are 1dB. The EIRP is 48dBW. Calculate the carrier-to-noise spectral density ratio. (7)

(b) With the help of block schematic, explain the working of satellite transponder. (8)

OR

(P.T.O.)

V. (a) Explain the architecture of Direct Television broadcast system. (7)

(b) The COSMOS 1675 satellite has an apogee height of 39342 km and perigee height of 613 km. Determine the semi-major axis and eccentricity of its orbit. (5)

(c) Distinguish between GEO, LEO and MEO. (3)

VI. (a) Explain the methods used to improve the coverage and capacity in cellular system. (6)

(b) The US AMPS system is allocated 50MHz of spectrum in the 800MHz range and provides 832 channels. Forty-two of those channels are control channels. The forward channel frequency is exactly 45MHz greater than the reverse channel frequency. (9)

(i) Is the AMPS system simplex, half duplex or duplex? What is the bandwidth for each channel and how is it distributed between the base station and the subscriber?

(ii) Assume a base station transit control information on channel 352, operating at 880.560 MHz. What is the transmission frequency of a subscriber unit transmitting on channel 352?

(iii) For an ideal hexagonal cellular layout which has identical cell coverage, what is the distance between the centers of two nearest co-channel cells for seven-cell reuse?

OR

VII. (a) Explain the frequency hopping techniques of spread spectrum with block diagram. (10)

(b) Explain DECT functional concept. (5)

VIII. Explain the following with respect to antenna: (15)

(i) Directivity and Gain
(ii) Radiation intensity
(iii) Beam efficiency
(iv) Antenna Apertures
(v) Half power beamwidth (HPBW)

OR

IX. (a) Explain the following: (8)

(i) Ray path (ii) Critical frequency
(iii) MUF (iv) LUF

(b) Calculate the skip distance for flat earth with MUF of 10 MHz if the wave is reflected from a height of 300km where the maximum value of n is 0.9. (7)

***

BTS (C) – VI – 04.12 – 016 – E

B.Tech Degree VI Semester Examination April 2012

ME 606 CAD/CAM

(2006 Scheme)

Time : 3 Hours Maximum Marks : 100

PART A

(Answer ***ALL*** questions)

(8 x 5 = 40)

I. (a) Discuss role of computers in design process.

(b) Explain various types of automated transfer machines used in production industry.

(c) With various advantages and disadvantages explain open loop and closed loop control system used in CNC machine tools.

(d) Explain various formats in manual part programming technique used in CNC machine tool control.

(e) Explain static and dynamic errors in CNC machining centers.

(f) Describe accuracy, repeatability and resolution of a CNC system.

(g) Explain P.T.P and C.P systems used in robotic control systems.

(h) Explain CIM with the help of a block diagram. Also explain its features in a production industry.

PART B

(4 x 15 = 60)

II. (a) Explain various geometric modelling techniques used in CAD. (7)

(b) With the help of a flow chart explain various steps in developing a finite element analysis. (8)

OR

III. (a) Briefly explain various data exchange protocols used in CAD/CAM. (5)

(b) Explain various levels of automation in detail. (10)

IV. Explain with the help of neat sketches various classification of CNC machine tools in detail. (15)

OR

V. With the help of a flow chart explain fundamentals of part programming. (15)

VI. (a) Briefly discuss special design features to match machine tools to NC systems. (7)

(b) Describe the functions of automatic tool changers and tool monitoring systems used in CNC machine tools. (8)

OR

VII. (a) What are the additional features of a CNC machine tool over an NC machine tool? Explain. (10)

(b) Explain various features of automatic pallet changers in detail. (5)

VIII. (a) Explain with neat sketches the classifications of Robot according to its physical configuration in detail. (8)

(b) What are the various programming techniques used in a Robotic system? Explain. (7)

OR

IX. (a) Explain various internal and external sensors used in Robot to perform its given commands. (10)

(b) Explain levels of flexibility in an FMS system in detail. (5)

***

BTS(C) – VI – 04.12 – 016 - B

B. Tech Degree VI Semester Examination April 2012

CS/IT 606 COMPUTER NETWORKS

(2006 Scheme)

Time : 3 Hours Maximum Marks : 100

PART A

(Answer ***ALL*** questions)

(8 x 5 = 40)

I. (a) What is the significance of 'layered concept' in Computer Networks?

(b) How can piggybacking improve the efficiency in data transmission between sender and receiver?

(c) Compare the properties of TCP and UDP connections between two nodes.

(d) Why fragmentation is required in IP packets? How fragmented IP packets reassembled before passing to the destination application?

(e) Explain the process of error detection using Hamming Codes.

(f) Differentiate between broadcast networks and point-to-point networks.

(g) Discuss the characteristics of FDDI networks.

(h) What are the major characteristics of ISDN Networks?

PART B

(4 x 15 = 60)

II. Briefly explain how HTTP communication takes place between two nodes, with special emphasis on persistant and non persistant connections. (15)

OR

III. With a neat architectural diagram, explain the TCP/IP reference model. Explain the functions of each layer in the model. (15)

IV. Draw the structure of a TCP segment. Give the significance of the following fields in the TCP segment: (15)
(i) Sequence number (ii) Receive window (iii) Internet checksum field.

OR

V. Briefly describe the differences between the virtual circuit and datagram networks. (15)

VI. What are the characteristics of link state routing? With the indicated link costs given in the following diagram compute the shortest path from 'w' to all other nodes using Dijkstra's algorithm: (15)

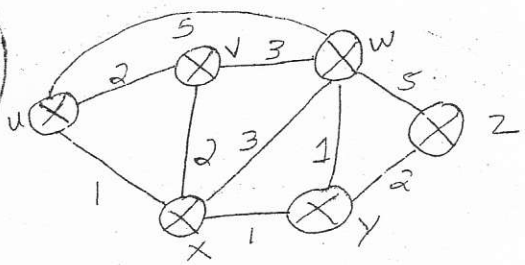

OR

VII. (a) Explain how CSMA/CD protocol handles collision that may occur in Ethernet networks. (7)

(b) Differentiate between Go-Buck –N and Selective-Repeat sliding window protocols. (8)

VIII. What are the specifications of Ethernet standard? Explain the frame structure of Ethernet. (15)

OR

IX. Discuss the various data encoding schemes used in Computer Networks. (15)

***

BTS(C) – VI – 04.12 – 16 - D

B. Tech Degree VI Semester Examination April 2012

EC/EI 606 EMBEDDED SYSTEMS

(2006 Scheme)

Time : 3 Hours | Maximum Marks : 100

PART A

(Answer *ALL* questions)

(8 x 5 = 40)

I. (a) What is an embedded system? Explain its characteristics.

(b) What are the different categories of embedded system? Explain.

(c) Describe how microcontroller differs from microprocessor.

(d) Explain any two embedded operating system.

(e) Mention the features of RT Linux system.

(f) Explain how an application can be controlled from the RT Linux System.

(g) Briefly explain the memory organization of PIC16F873.

(h) What are the features of PIC 16F 873?

PART B

(4 x 15 = 60)

II. Explain in detail any five application of embedded system in consumer electronics. (15)

OR

III. (a) What are the requirements of an embedded system? (8)

(b) What are the challenges faced in the design of an embedded system for biomedical application? (7)

IV. Explain any three communication interface standards in embedded system. (15)

OR

V. Briefly explain the different steps in embedded system development process. (15)

VI. Briefly explain the embedded database application with example. (15)

OR

VII. Describe the Real-time embedded software development process using RT Linux. (15)

VIII. Explain the architecture of typical microchip PIC16F 873 with proper diagram. (15)

OR

IX. (a) Describe the I^2C mode of operation in PIC with necessary diagram. (8)

(b) Explain the different addressing modes that are used in PIC 16F 873 with one example. (7)

***

B.Tech Degree VI Semester Examination April 2012

EE 606 ELECTRICAL MACHINES III

(2006 Scheme)

Time: 3 Hours | Maximum Marks: 100

PART A

(Answer *ALL* questions)

(8 × 5 = 40)

I. (a) Explain the differences between squirrel cage and slip ring induction motor.
(b) Draw and explain the equivalent circuit of an induction motor.
(c) Explain cogging and crawling.
(d) Describe about double cage induction motor.
(e) Explain how the speed of slip ring induction motor can be changed by changing rotor resistance.
(f) Write short notes on synchronous induction motor.
(g) Explain why a single phase induction motor does not self start.
(h) Discuss the working of shaded pole motor.

PART B

(4 × 15 = 60)

II. (a) The power input to a 500V, 50H, 6-pole, 3 phase squirrel cage induction motor running at 975 rpm is 40KW. The stator losses are 1KW and the friction and windage losses are 2KW. Calculate: (i) slip (ii) rotor copper loss (iii) brake hp (iv) the efficiency. (10)
(b) Derive an expression for developed torque in a 3 phase induction motor. (5)

OR

III. Draw the circle diagram for a 3 phase 6 pole 50Hz, 400V star connected induction motor from the following data:

No load test : 400V, 9A, 1250 watts
Blocked rotor test : 200V, 50A, 6930 watts

The stator loss at standstill is 55% of total copper losses and full load current is 32A. From circle diagram determine (i) pf, slip, output, efficiency and torque at full load (ii) starting torque (iii) maximum power output and power input. (15)

IV. (a) What are the different methods of starting a 3 phase squirrel cage induction motor? With neat diagram explain in detail the auto transformer method of starting. (10)
(b) Explain deep bar cage rotor motor. (5)

OR

V. If the standstill impedance of the outer cage of a double cage machine is $0.3 + j0.4\Omega$ and of the inner cage is $0.1 + j1.5$ ohms, compare the relative currents and torques of the two cages (i) at standstill (ii) at a slip of 5%. (15)

VI. (a) Explain with figure Kramer system of speed control of 3-phase induction motor. (10)
(b) Calculate the reduction in starting current and starting torque when the supply voltage to a cage motor is 80% instead of 100%. (5)

OR

VII. (a) Describe with a neat diagram the principle of operation of induction generator. (8)
(b) Explain cascade arrangement for controlling speed of three phase induction motor. (7)

VIII. (a) Draw the diagram of a Schrage motor and explain its working principle. (10)
(b) Discuss the function of commutator as frequency changer. (5)

OR

IX. (a) Explain the operation of universal motor. (8)
(b) Describe the construction and principle of a repulsion motor. (7)

***